THE CITY OF SANIBEL
POST HURRICANE IAN LIFT STATION
CONTROL PANEL PROCUREMENT PHASE 1

10600 CHEVROLET WAY, SUITE 102
ESTERO, FLORIDA 33928
Ph: (239) 390-1467
ENGINEERING BUSINESS NO. 2429
www.tetratech.com
TETRA TECH

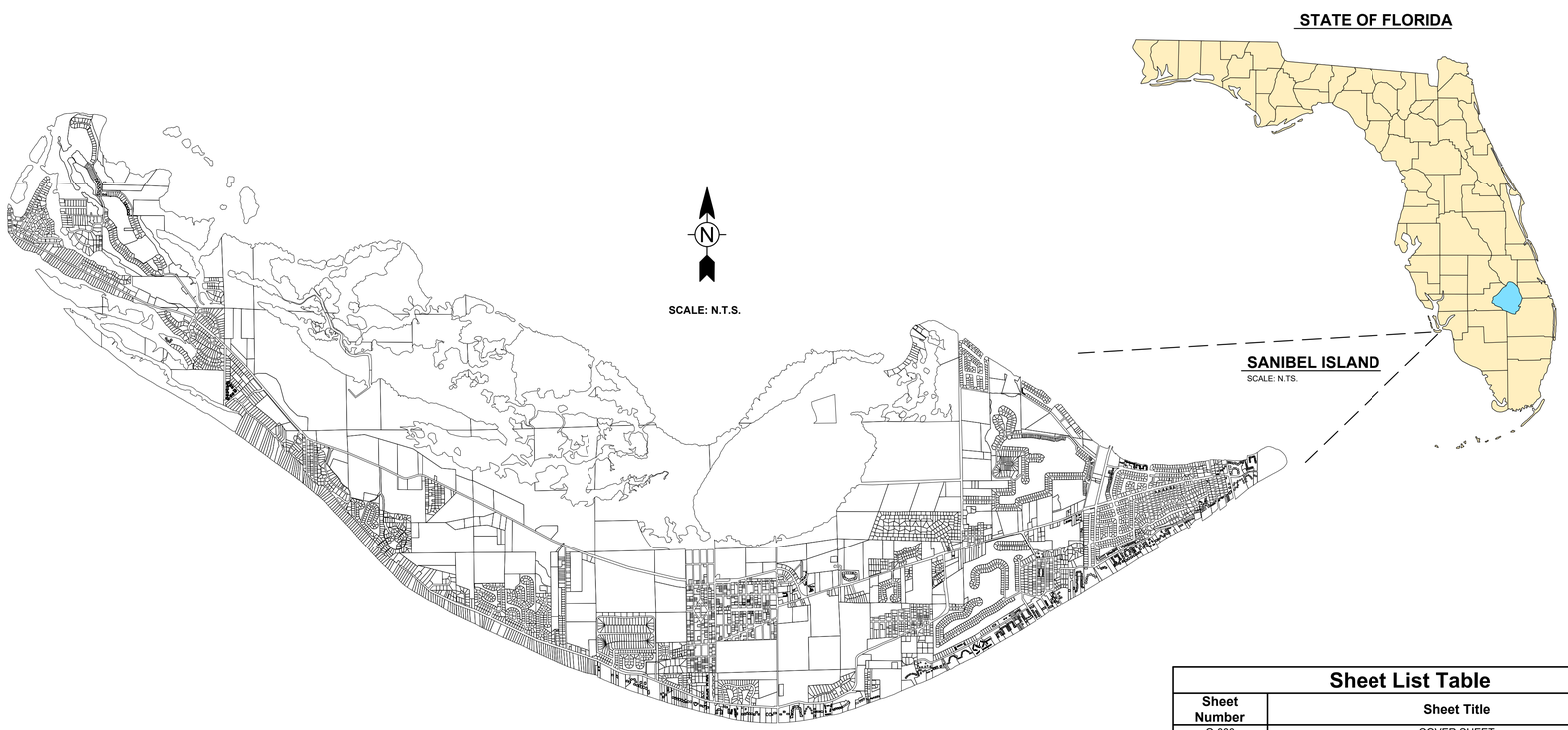

PROJECT LOCATION:
SANIBEL, FLORIDA 33957

CLIENT INFORMATION:
THE CITY OF SANIBEL
SANIBEL, FLORIDA 33957
Ph: (239) 472-1008 - Fax (239) 472-5531

Tt PROJECT No.:
200-08498-24002

CLIENT PROJECT No.:

PROJECT DESCRIPTION / NOTES:
FABRICATION OF 41 DUPLEX PUMP STATION CONTROL PANELS (POWER AND CONTROL PANELS), TERMINATION CABINETS AND VENTED PEDESTAL BOXES.

ISSUED:
04/03/25 - BID SET

VICINITY MAP:

PREPARED FOR
THE CITY OF SANIBEL

UTILITIES DEPARTMENT
800 DUNLOP ROAD
SANIBEL, FLORIDA 33957

MAYOR - MIKE MILLER
VICE MAYOR - HOLLY D. SMITH
CITY COUNCIL - RICHARD JOHNSON
CITY COUNCIL - LAURA DeBRUCE
CITY COUNCIL - JOHN HENSHAW

CITY MANAGER - DANA A. SOUZA
PUBLIC WORKS DIRECTOR - ALFRED J. MITTL, PE

Sheet List Table

GENERAL AND ANNOTATIVE SYMBOLS

SYMBOL	DESCRIPTION
P-ABC-123456X	CALLOUT - CONDUIT PREFIX: P = POWER C = CONTROLS S = SIGNAL X = SUFFIX (VARIABLE) M = MEDIUM VOLTAGE
PMP-040101	CALLOUT - EQUIPMENT
LI 101	CALLOUT - INSTRUMENT
#	CONSTRUCTION NOTE
#	KEYED NOTE REFERENCE
A SHT #	OFF-SHEET REFERENCE FOR WIRING AND CIRCUITS
	LIGHT LINE INDICATED EXISTING ELECTRICAL OR EXISTING EQUIPMENT. LIGHT LINE MAY ALSO BE USED FOR DETAIL DRAWING CLARITY.
	HEAVY LINE INDICATES NEW WORK TO BE PROVIDED
	HATCH INDICATES EXISTING WORK TO BE REMOVED
	LINE-BREAK
	CONDUCTORS CONNECTED
	CONDUCTORS NOT CONNECTED
	CONTINUATION

CONDUIT SYMBOLS

SYMBOL	DESCRIPTION
	EXPOSED CONDUIT
	BRANCH CIRCUIT, CONCEALED ABOVE CEILING OR IN WALL WHERE POSSIBLE. WHERE EXPOSED ROUTE PARALLEL AND PERPENDICULAR TO STRUCTURE.
	CONDUIT IN SLAB OR BELOW GRADE
UE	UNDEGROUND ELECTRICAL PRIMARY CONDUCTOR
UG	DIRECT BURIED CABLE
DB	UNDERGROUND CONCRETE ENCASED DUCT BANK
E	DIRECT BURIED CONDUIT
OE	OVERHEAD NON-RIGID LINE
	CONDUIT WITH CONDUIT SEAL FITTING
	NON-RIGID CONDUIT
	CONDUIT TO CABLE GLAND SEAL
	CONDUIT BENDS TOWARD OBSERVER
	CONDUIT BENDS AWAY FROM OBSERVER
	CONDUIT STUB AND CAPPED
P1:X,Y,Z	BRANCH CIRCUIT HOME RUN. 3/4"C(#12 AWG MIN) U.N.O. P1 - PANELBOARD X,Y,Z - CIRCUIT NUMBERS
	BELOW-GRADE PENETRATION CONDUIT SEAL
WALL HR	CONDUIT FIRE-RATED WALL PENETRATION

LIGHTING SYMBOLS

SYMBOL	DESCRIPTION
XX	CEILING MOUNTED EXIT SIGN. ARROW IF INDICATED DENOTES ARROWS ON EXIT FACE PLACE. HATCH INDICATES NUMBER OF EXIT FACES. XX - DENOTES TYPE. SEE FIXTURE SCHEDULE
	WALL MOUNTED EXIT SIGN.
	EMERGENCY UNIT LIGHT FIXTURE WITH 2 HEADS
P1:10 XX a	CEILING LIGHT FIXTURE. SIZED PER PHYSICAL DIMENSIONS OF FIXTURE XX - DENOTES TYPE. SEE FIXTURE SCHEDULE a - DENOTES CONTROLLED BY SWITCH IF INDICATED P1:10 - DENOTES SOURCE PANEL AND BRANCH CIRCUIT NUMBER NOTE: FIXTURE MODIFIERS APPLICABLE TO ALL FIXTURE TYPES.
	CEILING LIGHT FIXTURE HATCH DENOTES EQUIPPED WITH EMERGENCY BATTERY BACKUP UNIT
	WALL MOUNTED LIGHT FIXTURE
	RECESSED DOWN LIGHT FIXTURE
	HIGH MAST LIGHT FIXTURE
	POLE MOUNTED LIGHT FIXTURE
	POLE MOUNTED LIGHT FIXTURE WITH NUMBER OF ARMS OR HEADS AS SHOWN
	HANDRAIL MOUNTED LIGHT FIXTURE

POWER PLAN SYMBOLS

SYMBOL	DESCRIPTION
3P/30A 4X X	DISCONNECT SWITCH (SIZE MAY VARY AND MAY DENOTE ACTUAL EQUIPMENT DIMENSIONS) X - DENOTES TYPE F - FUSED NF - NON-FUSED (OR LEFT BLANK) CB - ENCLOSED CIRCUIT BREAKER 3P - NUMBER OF POLES 30A - AMP RATING 4X - NEMA RATING 3R - PAINTED STEEL 4X - 316 STAINLESS STEEL N1 - INTERIOR RATED N12 - INTERIOR WITH DUST GASKET 4XP - NON-METALLIC NEMA 4X N7 - EXPLOSION PROOF
1X	COMBINATION TYPE STARTER AND DISCONNECT X - NEMA STARTER SIZE M - MAGNETIC TYPE E - ELECTRONIC TYPE
	FULL VOLTAGE NON-REVERSING (FVNR) STARTER
100AF / 80AT	TOP NUMBER DENOTES FRAME SIZE BOTTOM NUMBER DENOTES TRIP OR FUSE SIZE
J	JUNCTION BOX - GENERAL-PURPOSE
J HxWxD	EXTERIOR JUNCTION BOX XX DENOTES NEMA RATING HxWxD DENOTES DIMENSIONS
PB	PULL-BOX
HH	HAND HOLE
MH	MAN HOLE
TB	TERMINAL BOX
M	UTILITY METER
T	DRY-TYP TRANSFORMER (U.N.O). SIZE MAY VARY ON PLAN SHEETS TO DENOTE ACTUAL TRANSFORMER DIMENSIONS
	ELECTRICAL EQUIPMENT AS NOTED ON PLANS. SURFACE MOUNTED.
	ELECTRICAL EQUIPMENT AS NOTED ON PLANS. FLUSH OR RECESSED MOUNTED.
X X	MOTOR OR MOTOR CONNECTION POINT X - DENOTES HP
E	PROVIDE ELECTRICAL CONNECTION TO EQUIPMENT FURNISHED BY OTHERS
	CONTROL SWITCH OR STATION FOR MOTORS
SPD C3	SURGE PROTECTION DEVICE C3 = SERVICE ENTRANCE DEVICE (TYPE 1) B3 = DISTRIBUTION DEVICE (TYPE 2) A3 = POINT OF USE DEVICE (TYPE 3)
ST	SHUNT-TRIP BUTTON. FLUSH MOUNTED NEMA 4X FOR EXTERIOR LOCATIONS
VFD	VARIABLE FREQUENCY DRIVE
RVSS	REDUCED VOLTAGE SOFT STARTER
ATS	AUTOMATIC TRANSFER SWITCH
	GENERATOR
T	THERMOSTAT
LC	LIGHTING CONTACTOR
	UTILITY POLE
	FLOAT SWITCH

RECEPTACLE SYMBOLS

SYMBOL	DESCRIPTION
XX	5-20R DUPLEX RECEPTACLE, 20 AMP, 5-20R, 125V - 18" AFF INTERIOR, 48" AFG EXTERIOR, U.N.O. XX - MOUNTING HEIGHT GFCI - GROUND FAULT PROTECTION WP - WEATHERPROOF COVER WPU - WEATHERPROOF WHILE IN USE COVER IG - ISOLATED GROUND NOTE: RECEPTACLE MODIFIERS APPLICABLE TO ALL RECEPTACLE TYPES.
	FLOOR MOUNT DUPLEX RECEPTACLE
	QUADPLEX RECEPTACLE
	CEILING MOUNT DUPLEX RECEPTACLE
	DUPLEX RECEPTACLE - POWERED FROM UPS
	HALF SWITCHED DUPLEX RECEPTACLE
	DUPLEX RECEPTACLE - MOUNT 6" ABOVE COUNTER
	RECEPTACLE - DUPLEX OUTDOOR WP/GFCI w/ IN-USE COVER
T	RECEPTACLE - SPECIAL (AS INDICATED ON PLANS) T - TWIST LOCK
	RECEPTACLE - WELDING
	RECEPTACLE - PLUG STRIP
FB	FURNITURE SYSTEM CONNECTION BOX
P:X-Y	NUMBERS ADJACENT TO RECEPTACLE INDICATED SOURCE PANEL ("P:X") AND CIRCUIT NUMBER ("Y") FEEDING BRANCH CIRCUIT.

SWITCH SYMBOLS

SYMBOL	DESCRIPTION
a X	120/277V, SINGLE TOGGLE, LIGHT SWITCH. 48" AFF X - DENOTES TYPE 3 - 3 WAY 4 - 4 WAY D - DIMMING (1500 WATT U.N.O.) OS - OCCUPANCY SENSOR WITH MANUAL OVERRIDE OSD - OCCUPANCY SENSOR WITH DIMMING AND MANUAL OVERRIDE M - MOTOR RATED LOCKABLE TOGGLE SWITCH LV - LOW VOLTAGE DIGITAL LV2 - LOW VOLTAGE DIGITAL WITH DIMMING WP - WEATHERPROOF COVER HOA - HAND-OFF-AUTO a - DENOTES FIXTURES CONTROLLED
M	VACANCY/OCCUPANCY SENSOR, CEILING MOUNTED
PC	PHOTOCELL (MOUNT EXTERIOR OF BUILDING FACING NORTH U.N.O)
LC	LIGHTING CONTACTOR.

GROUNDING SYMBOLS

SYMBOL	DESCRIPTION
G	GROUND CONDUCTOR. BARE COPPER GROUND COUNTERPOISE. (4/0 TINNED COPPER)
G	GROUND CONDUCTOR BURIED 30" BELOW GRADE
G	GROUND CONDUCTOR WITH EXOTHERMIC CONNECTION. PIGTAIL 18" ABOVE FINISHED FLOOR.
G	GROUND CONDUCTOR WITH MECHANICAL CONNECTION.
	GROUND BAR - SEE PLANS AND SPECS FOR DIMENSIONS AND REQUIREMENTS
	GROUND ROD WITH INSPECTION WELL
	GROUND ROD (3/4"Ø X 10' COPPER-CLAD U.N.O)
	CONCRETE ENCASED ELECTRODE OR INDICATES BONDING TO CONCRETE REBAR

TETRA TECH
ENGINEERING BUSINESS NO. 2429
www.tetratech.com
10600 CHEVROLET WAY, SUITE 102
ESTERO, FLORIDA 33928
PHONE: (239) 390-1467 FAX: (239) 390-1769

BID SET

CITY OF SANIBEL
800 Dunlop Road
Sanibel, Florida 33957

MARK	DATE	DESCRIPTION	BY

THE CITY OF SANIBEL
LIFT STATION CONTROL PANELS

ELECTRICAL LEGEND

Project No.:	200-08498-24002
Designed By:	JAS
Drawn By:	JAS
Checked By:	JDM

E-001

Bar Measures 1 inch

4/3/2025 3:37:11 PM - O:\PROJECTS\ORLANDO\ER\08498\200-08498-24002\CAD\SHEETFILES\E-003 ELECTRICAL LEGEND.DWG - SEIGNORET, JASON

LIGHTNING PROTECTION SYMBOLS

SYMBOL	DESCRIPTION
F	AIR TERMINAL - ROOF MOUNTED (3/8"Ø X 12" U.N.O) F = ADHESIVE SECURED
	AIR TERMINAL - MOUNTED TO SIDE OF EQUIPMENT/PARAPET
	AIR TERMINAL - MULTIPOINT
H	AIR TERMINAL - ELEVATED HEIGHT WITH DIAGONAL BRACING H = OVERALL HEIGHT ABOVE MOUNTING SURFACE
	CROSS CONDUCTOR
CI	CLASS I LIGHTNING PROTECTION CABLE
CII	CLASS II LIGHTNING PROTECTION CABLE
	THROUGH-ROOF PENETRATION SEAL
	CONDUCTOR BONDING CONNECTION
	EQUIPMENT/BUILDING BONDING CONNECTION
DN	DOWN-LEAD CONDUCTOR (TO EARTH ELECTRODE SYSTEM) PROVIDE BI-METALLIC CONNECTION IN JUNCTION BOX BETWEEN LIGHTNING PROTECTION CABLE AND GROUNDING CABLE

ACCESS CONTROL / SECURITY SYMBOLS

SYMBOL	DESCRIPTION
DC	DOOR CONTACT
RX	REQUEST TO EXIT
CR	CARD READER
CRP	CARD READER WITH PINPAD
DL	DOOR LATCH - ELECTRIC STRIKE
IDP	INTRUSION DETECTION PANEL. PROVIDE 120VAC BRANCH CIRCUIT
ACP	ACCESS CONTROL PANEL. PROVIDE 120VAC BRANCH CIRCUIT
HS	INTERCOM HANDSET
	INTERCOM SPEAKER

FIRE PROTECTION SYMBOLS

SYMBOL	DESCRIPTION
FD XX	FLAME DETECTOR XX-DENOTES TYPE UV/IR - COMBINATION UV - ULTRAVIOLET IR - INFRARED VR - VISIBLE RADIATION
HD XX	HEAT DETECTOR XX-DENOTES TYPE F - FIXED R - RATE OF RISE
GD XX	GAS DETECTOR XX- GAS TYPE
SD XX	SMOKE DETECTOR XX-DENOTES TYPE ID - IN DUCT I - IONIZATION P - PHOTO ELECTRIC IP - DUAL RATED R - RETURN S - SUPPLY
F	FIRE ALARM SYSTEM CONDUIT AND WIRING
F	FIRE ALARM STROBE LIGHT WALL MOUNTED
H	FIRE ALARM HORN ONLY
F CD	FIRE ALARM HORN/STROBE LIGHT COMBINATION WALL MOUNTED CD = CANDELA RATING
SP	MASS NOTIFICATION SPEAKER/STROBE LIGHT COMBINATION WALL MOUNTED
F	FIRE ALARM SPEAKER/STROBE LIGHT COMBINATION CEILING MOUNT
FAAP	FIRE ALARM ANNUNCIATOR PANEL
FACP	FIRE ALARM CONTROL PANEL
GAP	GRAPHIC ANNUNCIATOR
ANN	REMOTE ANNUCIATOR PANEL
RL	OUTPUT RELAY
VS	VALVE SUPERVISOR SWITCH
PS	PRESSURE SWITCH
DH	DOOR HOLDER
F	FIRE ALARM MANUAL PULL STATION
R	FIRE ALARM RELAY
FS	FIRE ALARM FLOW SWITCH
FE	FIRE EXTINGUISHER
TS	FIRE ALARM TAMPER SWITCH

TELECOMMUNICATIONS SYMBOLS

SYMBOL	DESCRIPTION
	TELECOMMUNICATIONS JACK. PROVIDE CAT-6 IN 1" CONDUIT TO SOURCE AS INDICATED ON PLANS. IN AREAS WITH DROP CEILING PROVIDE 1" CONDUIT TO ABOVE CEILING AND THEN UTILIZE CABLE TRAY OR "J" HOOKS TO ROUTE CAT-6 TO SOURCE
	COMBINATION TELECOMMUNICATIONS JACK. PROVIDE TWO CAT-6
	CEILING MOUNTED
WAP	WIRELESS ACCESS POINT
	FLOOR MOUTED
TV	TELEVISION OUTLET, HEIGHT AS NOTED ON PLANS. PROVIDE 1" CONDUIT TO SOURCE SHOWN
AV	A/V BOX, PROVIDE 2" CONDUIT TO SOURCE SHOWN
	BASKET TYPE CABLE TRAY
	LADDER TYPE CABLE TRAY

SINGLE-LINE DIAGRAM SYMBOLS

SYMBOL	DESCRIPTION
R XX K YY	TRANSFORMER XX - DENOTES SIZE IN KVA YY - DENOTES VOLTAGE AND PHASE R - DENOTE IMPEDANCE (PROVIDE STANDARD IF BLANK) K - DENOTES K-FACTOR
	DELTA CONFIGURED WINDING
	WYE CONFIGURED WINDING
	GROUND ELECTRODE (3/4"Ø X 10') COPPER-CLAD U.N.O.
SPD	SURGE PROTECTION DEVICE
	DISCONNECT SWITCH
HTR 75KW	HEATER w/ SIZE INDICATED
	SOLENOID VALVE
	TRANSFER SWITCH
	LOW VOLTAGE DISCONNECT SWITCH
	HIGH VOLTAGE FUSE (ABOVE 600 V)
XX:A	LOW VOLTAGE FUSE XX DENOTES AMP RATING
	CIRCUIT BREAKER
	DRAW OUT BREAKER
X	MOTOR WITH ASSUMED HORSEPOWER. ACTUAL HORSEPOWER MAY DIFFER - INCREASE AS REQUIRED
ST	SHUNT TRIP
	UTILITY CONNECTION
CT M	CT ENCLOSURE WITH SEPARATE METER
G XX:KW YY:V	GENERATOR XX: DENOTES SIZE IN KW YY: DENOTES VOLTAGE AND PHASE
	FLOAT SWITCH
3 (3)	CURRENT TRANSFORMER, (3) INDICATES QUANTITY
2	M-MAGNETIC MOTOR STARTER, C-GENERAL USE CONTACTOR (NUMBER INDICATED NEMA SIZE)
	MOTOR OVERLOAD DEVICE
	CAPACITOR, 3 PHASE, SIZE AS INDICATED
	MAGNETIC STARTER (BACKGROUND DRAWINGS ONLY)
	COMBINATION STARTER FUSED UNLESS NOTED (CIRCUIT BREAKER)
M	UTILITY METER
I	INTERLOCK FUNCTION
K	MECHANICAL KEYED INTERLOCK
	INTERLOCK ASSOCIATION
VFD	VARIABLE FREQUENCY DRIVE
SPD	SURGE PROTECTION DEVICE
PQM	POWER QUALITY MONITOR
SSRV	SOLID STATE REDUCED VOLTAGE STARTER
SST	SOLID STATE TRIP
RVSS	REDUCED VOLTAGE SOFT STARTER
N	BUS CONNECTION

CONTROL CIRCUIT & PILOT DEVICE LEGEND

SYMBOL	DESCRIPTION
	PRESS. ACTUATED SWITCH
	FLOAT ACTUATED SWITCH
	FLOW ACTUATED SWITCH
	TEMP. ACTUATED SWITCH
	LIMIT SWITCH - NORMALLY OPEN
	LIMIT SWITCH - NORMALLY CLOSED
	LIGHT SWITCH - NORMALLY CLOSED HELD OPEN
	LIGHT SWITCH - NORMALLY OPEN HELD CLOSED
	FUSE
CR 1	CONTROL RELAY COIL
	CONTROL RELAY CONTACT-NORMALLY OPEN
	CONTROL RELAY CONTACT-NORMALLY CLOSED
CR L / CR U	TWO COIL LATCHING RELAY
T	TIMING RELAY COIL
	TIMED CLOSED CONTACT ON ENERGIZATION
	TIMED OPEN CONTACT ON ENERGIZATION
	TIMED OPEN CONTACT ON DE-ENERGIZATION
	TIMED CLOSED CONTACT ON DE-ENERGIZATION
	MOMENTARY PUSHBUTTON OPERATOR-NORMALLY OPEN
	MOMENTARY PUSHBUTTON OPERATOR-NORMALLY CLOSED
	PUSHBUTTON OPERATOR WITH MUSHROOM HEAD
(F)	FIELD LOCATED STOP BUTTON
	MAINTAINED PUSH-PULL OPERATOR
	MAINTAINED STOP-START PUSHBUTTON OPERATOR
	SOLENOID OR CLUTCH
R 1	PUSH-TO-TEST INDICATING LIGHT R = COLOR RED Y = COLOR YELLOW G = COLOR GREEN
	TIMED CLOSED CONTACT ON DE-ENERGIZATION
	MOMENTARY PUSHBUTTON OPERATOR-NORMALLY OPEN
	MOMENTARY PUSHBUTTON OPERATOR-NORMALLY CLOSED
	PUSHBUTTON OPERATOR WITH MUSHROOM HEAD
(F)	FIELD LOCATED STOP BUTTON
	MAINTAINED PUSH-PULL OPERATOR
	MAINTAINED STOP-START PUSHBUTTON OPERATOR
	SOLENOID OR CLUTCH
R	PUSH-TO-TEST INDICATING LIGHT R = COLOR RED Y = COLOR YELLOW G = COLOR GREEN
	MAINTAINED STOP MOMENTARY START PUSHBUTTON (JOG)
	ZERO SPEED OR ANTI-PLUGGING SWITCH
	LOCAL TERMINALS WITH EXTERNAL WIRING
ET	ELAPSED TIME INDICATOR
INST.	TIMING RELAY INSTANTANEOUS CONTACTS NORMALLY OPEN
INST.	TIMING RELAY INSTANTANEOUS CONTACTS NORMALLY CLOSED
X1 X2	120 VAC TRANSFORMER
H O A	SELECTOR SWITCH OPERATOR WITH FUNCTION SHOWN

TETRA TECH
ENGINEERING BUSINESS NO. 2429
www.tetratech.com
10600 CHEVROLET WAY, SUITE 102
ESTERO, FLORIDA 33928
PHONE: (239) 390-1467 FAX: (239) 390-1769

BID SET

CITY OF SANIBEL
800 Dunlop Road
Sanibel, Florida 33957

MARK	DATE	DESCRIPTION	BY

THE CITY OF SANIBEL
LIFT STATION CONTROL PANELS

ELECTRICAL LEGEND

Project No.:	200-08498-24002
Designed By:	JAS
Drawn By:	JAS
Checked By:	JDM

E-002

Bar Measures 1 inch

4/3/2025 3:37:13 PM - O:\PROJECTS\ORLANDO\ER\08498\200-08498-24002\CAD\SHEETFILES\E-003 ELECTRICAL LEGEND.DWG - SEIGNORET, JASON

GENERAL NOTES

1. PERFORM WORK IN COMPLIANCE WITH CODES AND ORDINANCES APPLICABLE TO AUTHORITIES HAVING JURISDICTION, INCLUDING BUT NOT LIMITED TO; NATIONAL ELECTRICAL CODE, NATIONAL FIRE PROTECTION CODES, BUILDING CODES, ENERGY CODES, HEALTH AND SAFETY CODES, LOCAL LAWS AND REGULATIONS, AND ACCESSIBILITY REQUIREMENTS. ADJUST WORK REQUIRED BY THIS CONTRACT WHERE NECESSARY FOR COMPLIANCE.
2. ADHERE TO THE LATEST VERSION OF APPLICABLE INDUSTRY STANDARDS, INCLUDING BUT NOT LIMITED TO; ISA - INSTRUMENT SOCIETY OF AUTOMATION, IES HANDBOOK AND RECOMMENDED PRACTICES FOR LIGHTING, NETA ACCEPTANCE TESTING STANDARDS (ATS), INSTITUTE OF ELECTRICAL AND ELECTRONICS ENGINEERS (IEEE), ANSI, ELECTRONIC INDUSTRY ALLIANCE / TELECOMMUNICATIONS INDUSTRY ASSOCIATION (EIA / TIA), AND BUILDING INDUSTRY CONSULTING SERVICES INTERNATIONAL (BICSI.)
3. PROVIDE EQUIPMENT AND MATERIALS LISTED AND LABELED BY A NATIONALLY RECOGNIZED TESTING LABORATORY ACCEPTABLE TO THE AUTHORITIES HAVING JURISDICTION. CONTROL PANELS SHALL BE UL 508A LISTED AND LABELED. ANY PLC PANEL, UL 508A CONTROL PANEL, MCC, SWITCHGEAR, STANDALONE MOTOR CONTROLLERS, OR OTHER LISTED ELECTRICAL EQUIPMENT MODIFIED IN THE FIELD AFTER IT HAS LEFT THE FACTORY SHALL BE EVALUATED BY AN NRTL TO PROVIDE A FIELD LISTING.
4. ADHERE TO OWNER'S SITE-SPECIFIC PROTOCOLS INCLUDING, BUT NOT LIMITED TO; SYSTEM OPERATIONS, HEALTH AND SAFETY, SITE ACCESS RESTRICTIONS, AND LOCK-OUT / TAG-OUT PROCEDURES.
5. PERFORM ELECTRICAL WORK IN ADHERENCE TO NECA 1 - STANDARD FOR GOOD WORKMANSHIP IN ELECTRICAL CONSTRUCTION.
6. COORDINATE WORK WITH OTHER TRADES, AND WITH OWNER'S THIRD-PARTY CONTRACTORS AS APPLICABLE.
7. THE CONTRACTOR IS RESPONSIBLE FOR MEANS AND METHODS OF CONSTRUCTION, INCLUDING BUT NOT LIMITED TO; TEMPORARY PROVISIONS TO MAINTAIN FACILITY USE, TEMPORARY CONSTRUCTION POWER AND COMMUNICATIONS, TOOLS / EQUIPMENT / AND MATERIALS REQUIRED FOR EXECUTION OF THEIR WORK, WORKFORCE SUPERVISION AND STAFFING, SITE HEALTH AND SAFETY, CONSTRUCTION SCHEDULING, SEQUENCE OF CONSTRUCTION, AND PLANNING AND COORDINATION OF WORK.
8. PREPARE AND SUBMIT COORDINATION DRAWINGS FOR ELECTRICAL EQUIPMENT PLACEMENT, UNDERGROUND DUCT BANKS, AND OVERHEAD CONDUIT RACKS AND CABLE TRAYS. ILLUSTRATE CONDUIT STUB-UPS AND ENTRY LOCATIONS INTO EQUIPMENT ENCLOSURES. COORDINATE WITH ADJACENT ITEMS FOR CODE-REQUIRED CLEARANCES, AND ACCESS AS REQUIRED FOR OPERATIONS AND MAINTENANCE. (COORDINATION DRAWINGS ARE REQUIRED PRIOR TO EQUIPMENT SHOP DRAWING APPROVAL.)
9. PLAN, PERMIT AND EXECUTE TRAFFIC CONTROL MEASURES AS REQUIRED TO PERFORM WORK IN STREETS AND PUBLIC RIGHT-OF-WAY.
10. PROTECT NEW AND EXISTING EQUIPMENT AND MATERIALS FROM DAMAGE AND DETERIORATION DURING CONSTRUCTION. REPAIR OR REPLACE ITEMS DAMAGED DURING CONSTRUCTION TO THE EXTENT THEIR DAMAGE IS UNNOTICEABLE AND IN A MANNER THAT DOES NOT AFFECT FUNCTION, USE, OR LONGEVITY (AT NO COST TO THE OWNER). WARRANTIES SHALL NOT BE AFFECTED BY ANY REPAIRS MADE IN THE FIELD.
11. THE OWNER HAS THE RIGHT TO RETAIN OR REFUSE ANY AND REMOVED MATERIALS. COORDINATE WITH THE OWNER ON RETAINED ITEMS AND EXERCISE CARE IN REMOVAL, HANDLING AND STORAGE. ITEMS NOT RETAINED BY THE OWNER SHALL BE RECYCLED WHERE SUCH PROGRAMS EXIST, NON-RECYCLABLE ITEMS SHALL BE LAWFULLY DISPOSED OF BY THE CONTRACTOR.
12. FACILITY OPERATIONS AND USE SHALL BE MAINTAINED, EXCEPT AS EXPLICITLY IDENTIFIED FOR DECOMMISSIONING. PROVIDE TEMPORARY FACILITIES AND SERVICES NECESSARY TO MAINTAIN FACILITY OPERATIONS DURING CONSTRUCTION. COORDINATE SCHEDULING AND TEMPORARY PROVISIONS FOR SYSTEM OUTAGES WITH THE OWNER A MINIMUM OF TWO WEEKS IN ADVANCE OF WORK WHICH MAY AFFECT FACILITY OPERATIONS. THIS MAY INCLUDE TEMPORARY LIFE SAFETY SYSTEMS, TEMPORARY POWER, TEMPORARY COMMUNICATION NETWORKS, TEMPORARY CONTROLS SOFTWARE AND HARDWARE. THESE ITEMS ARE TO BE INCLUDED IN THE CONTRACTOR'S BID AND SHALL NOT BE A BASIS FOR CLAIMS OF ADDITIONAL COST OR TIME.
13. WHERE NEW UTILITIES ARE INCLUDED IN THE SCOPE OF WORK, COORDINATE EXACT DIVISION OF UTILITY WORK WITH LOCAL UTILITY COMPANIES PROVIDING SERVICES. WHERE CONTRACT REQUIREMENTS EXCEED THIS COORDINATED RESPONSIBILITY, PROVIDE SUITABLE CREDIT FOR WORK BEING PERFORMED BY OTHERS.
14. THE CONTRACT DOCUMENTS ARE DIAGRAMMATIC IN NATURE AND REPRESENT SYSTEMS THAT ARE COMPLETE AND FUNCTIONAL FOR THEIR INTENDED USE. PROVIDE SUPPLEMENTAL MATERIALS, LABOR AND OTHER ANCILLARY ITEMS REQUIRED FOR COMPLETE INSTALLATION. THESE ITEMS ARE TO BE INCLUDED IN THE CONTRACTOR'S BID AND SHALL NOT BE A BASIS FOR CLAIMS OF ADDITIONAL COST OR TIME.
15. THE CONTRACTOR SHALL COORDINATE WITH THE HVAC AND PROCESS EQUIPMENT SUPPLIERS. THE INTENT OF THE ELECTRICAL DRAWINGS IS TO PROVIDE A FULLY FUNCTIONAL HVAC AND PROCESS TREATMENT SYSTEM. AS SUCH, THE CONTRACTOR MAY BE REQUIRED TO MODIFY ELECTRICAL INSTALLATION INDICATED ON PLANS OR PROVIDE SUPPLEMENTAL MATERIALS, LABOR AND OTHER ANCILLARY ITEMS REQUIRED FOR COMPLETE INSTALLATION. THESE ITEMS ARE TO BE INCLUDED IN THE CONTRACTOR'S BID AND SHALL NOT BE A BASIS FOR CLAIMS OF ADDITIONAL COST OR TIME
16. PROVIDE ADDITIONAL JUNCTION BOXES, PULL BOXES AND HANDHOLES NECESSARY TO LIMIT INSTALLED CONDUIT BENDS TO NO MORE THAN 360-DEGREES FOR OVERHEAD WORK, AND 270-DEGREES FOR UNDERGROUND WORK. LOCATE BOXES BASED OF CABLE PULLING TENSION AND ACCESSIBILITY. SIZE BOXES PER CABLE MANUFACTURES BENDING RADIUS REQUIREMENTS AND THE NEC. THESE ITEMS ARE TO BE INCLUDED IN THE CONTRACTOR'S BID AND SHALL NOT BE A BASIS FOR CLAIMS OF ADDITIONAL COST OR TIME. INSTALLATION OF NETWORK CABLING AND EQUIPMENT SHALL COMPLY WITH APPLICABLE EIA/TIA AND BICSI REQUIREMENTS.
17. CONVENIENCE OUTLETS SHOWN WITHOUT DESIGNATED CIRCUITRY SHALL INCLUDE CONDUIT AND WIRE BACK TO THE NEAREST 120V BRANCH CIRCUIT PANELBOARD USING WIRING METHODS CONSISTENT WITH SIMILAR CIRCUITS WITHIN THAT AREA. THIS WORK SHALL BE INCLUDED IN THE CONTRACTOR'S BID AND SHALL NOT BE A BASIS FOR CLAIMS OF ADDITIONAL COST OR TIME.
18. PROVIDE BRANCH CIRCUIT WIRING AND CONTROLS FOR INSTALLED LIGHTING SYSTEMS. THIS WORK IS TO BE INCLUDED IN THE CONTRACTOR'S BID AND SHALL NOT BE A BASIS FOR CLAIMS OF ADDITIONAL COST OR TIME.
19. ADJUST BRANCH CIRCUIT CONDUCTOR SIZES TO COMPENSATE FOR VOLTAGE DROP AND DERATING OF AMPACITY BASED ON THE NUMBER OF CONDUCTORS CONTAINED WITHIN A SUBJECT RACEWAY. FOR 20-AMPERE BRANCH CIRCUITS EXCEEDING 75-FEET IN OVERALL LENGTH, INCREASE CONDUCTORS TO #10AWG SIZE (OR GREATER) AS REQUIRED TO REDUCE VOLTAGE DROP TO NO MORE THAN THREE PERCENT LINE-TO-NEUTRAL. THESE ADJUSTMENTS ARE TO BE INCLUDED IN THE CONTRACTOR'S BID AND SHALL NOT BE A BASIS FOR CLAIMS OF ADDITIONAL COST OR TIME.
20. DIMENSIONAL TOLERANCES ARE NOT SPECIFICALLY INDICATED IN PLANS, DETAILS AND SPECIFICATIONS. ALIGN ABUTTING HORIZONTAL ITEMS WITHIN +/- 1/64", AND WALL-MOUNTED OR SUSPENDED ITEMS SEPARATED BY 12" OR MORE TO A TOLERANCE OF 1/16". PLUMB ITEMS SHALL NOT DEVIATE FROM TRUE VERTICAL BY MORE THAN 1/8" IN 10'-0". LEVEL EQUIPMENT TO WITHIN 1/32" ACROSS ITS HORIZONTAL SURFACE IN EACH DIRECTION.
21. ALL CONDUITS SHALL BE MINIMUM ¾ INCH RGS (ABOVE GRADE) AND 1" PVC (BELOW GRADE) UNLESS OTHERWISE NOTED AND INCLUDE AN INSULATED GREEN GROUNDING CONDUCTOR SIZED PER THE NEC. MINIMUM WIRE SIZE SHALL BE #12 AWG UNLESS OTHERWISE NOTED. THIS GROUND WIRE SHALL BE CONNECTED AT EACH END TO THE EQUIPMENT GROUND. THIS ALSO INCLUDES INSTRUMENTATION DEVICES SUCH AS LEVEL, PRESSURE, FLOW TRANSMITTERS, LIMIT SWITCHES, CONDUITS, NETWORK AND I/O CABLES.
22. COMPLETELY CONCEAL POLY-VINYL CHLORIDE (PVC) CONDUITS WITHIN CONCRETE OR BELOW GRADE (UNLESS SPECIFICALLY INDICATED OTHERWISE.) PROVIDE RIGID GALVANIZED STEEL RISERS AND ELBOWS (WITH OR WITHOUT PVC COATING AS SPECIFIED) FOR EMBEDDED / UNDERGROUND PVC CONDUIT RUNS.
23. SECURELY FASTEN EQUIPMENT AND MATERIALS INTO PLACE TO PROVIDE RESTRAINT AGAINST MOVEMENT AND SEPARATION DURING CONDITIONS OF REGULAR USE AND DURING SEISMIC EVENTS. PROVIDE AND SUBMIT FOR APPROVAL STRUCTURAL DESIGN AND CALCULATIONS BY A REGISTERED PROFESSIONAL ENGINEER FOR SEISMIC RESTRAINT.
24. UNDERGROUND POWER AND CONTROL CONDUIT SYSTEMS SHALL BE SEPARATED BY 12" MINIMUM AND SHALL BE RUN THROUGH SEPARATE JUNCTION BOXES AND MANHOLES.
25. ALL EXTERIOR AREAS SHALL BE CONSIDERED WET AND CORROSIVE. EXTERIOR ELECTRICAL ENCLOSURES SHALL BE NEMA 4X STAINLESS STEEL UNLESS SPECIFICALLY NOTED OTHERWISE.
26. THE CONTRACTOR SHALL BE RESPONSIBLE FOR PROVIDING A COORDINATED ELECTRICAL POWER DISTRIBUTION SYSTEM IN ACCORDANCE WITH NEC ARTICLE 240.12 AND ARTICLE 700.27 COORDINATION STUDIES SHALL BE APPROVED PRIOR TO ORDERING ELECTRICAL DISTRIBUTION EQUIPMENT AND BREAKERS.
27. ELECTRICAL SYSTEM INSTALLED IN HAZARDOUS LOCATIONS SHALL BE CONSTRUCTED IN ACCORDANCE WITH CHAPTER 5, ARTICLE 500 OF THE NEC. EQUIPMENT SHALL BE RATED FOR THE HAZARDOUS AREA IN WHICH IT IS PLACED. CONDUITS LEAVING HAZARDOUS AREAS SHALL BE SEALED PER THE NEC. STANDARDS SUCH AS NFPA 820 AND API 500 SHALL BE USED IN ACCORDANCE WITH CHAPTER 5 OF THE NEC.
28. THE CONTRACTOR SHALL SIZE WIRING NOT EXPLICITLY SHOWN ON THE DRAWINGS ACCORDING TO THE REQUIREMENT OF THE NEC FOR THE SPECIFIC APPLICATION AND CONDITIONS. THE INSTALLATION SHALL BE IN ACCORDANCE WITH THE CONTRACT REQUIREMENTS.
29. THE CONTRACTOR SHALL BE RESPONSIBLE FOR LOCATING UNDERGROUND UTILITIES AND PROTECTING SAID UTILITIES DURING THE INSTALLATION OF THE ELECTRICAL SYSTEM.
30. WHERE SELECTIVE DEMOLITION TO EXISTING PAVEMENTS AND SIDEWALKS ARE REQUIRED TO PERFORM CONSTRUCTION ACTIVITIES, NEATLY SAW-CUT SURFACES ALONG EDGES OF WORK AREA.
31. CORE-DRILLING SHALL BE UTILIZED FOR CONCRETE WALLS AND FLOORS WHERE PENETRATIONS ARE REQUIRED. LOCATE REINFORCING STEEL PRIOR TO CORE DRILLING AND AVOID CUTTING STEEL WHERE POSSIBLE. WHERE CUTTING OF REINFORCING STEEL IS UNAVOIDABLE, SUBMIT AN RFI AND OBTAIN STRUCTURAL APPROVAL FOR THE NECESSARY REPAIRS ASSOCIATED WITH CUTTING REINFORCING STEEL.
32. VERIFY VOLTAGE AND PHASE PRIOR TO ORDERING AND AGAIN PRIOR TO TERMINATION OF CONDUCTORS ON EQUIPMENT AND DEVICES. DAMAGES RESULTING FROM LACK OF VERIFICATION SHALL BE BORNE BY THE CONTRACTOR.
33. SECURE SURFACE-MOUNTED ELECTRICAL EQUIPMENT AND RACEWAYS WITH CHANNEL STRUT. MINIMUM STRUT LENGTH TO BE 12 INCHES, WHERE POSSIBLE.
34. APPLY DUCT SEAL TO CONDUITS ENTERING CONTROL PANELS AND ELECTRICAL EQUIPMENT ENCLOSURES.
35. ADJUST EQUIPMENT RATINGS AND CAPACITIES TO COMPENSATE FOR SITE-SPECIFIC AMBIENT TEMPERATURE CONDITIONS AND ELEVATIONS. SIZE EQUIPMENT AS HEAVY DUTY WHERE CONDITIONS OF USE WARRANT.
36. PERFORM FINAL POWER STUDIES AND ARC-FLASH EVALUATION AFTER EQUIPMENT HAS BEEN SELECTED, BUT PRIOR TO ORDERING, ALLOWING FOR ADJUSTMENTS TO OVERCURRENT DEVICE SELECTION AND EQUIPMENT RATINGS AS DETERMINED BY THE STUDY. UNSUITABLE EQUIPMENT ORDERED PRIOR TO PERFORMING THESE STUDIES SHALL BE REPLACED BY THE CONTRACTOR AT NO ADDITIONAL COST TO THE OWNER.
37. WIRE STARTERS IN ACCORDANCE WITH NEMA STANDARD ICS 18-2001 (CURRENT VERSION), CLASS IIB WIRING. SUBMIT ENGINEERED SHOP DRAWINGS FOR STARTERS SHOWN TO BE WIRED.
38. MAINTAIN A COMPREHENSIVE SET OF UP TO DATE AS-CONSTRUCTED RECORD DOCUMENTS, WHICH SHALL BE KEPT AND AVAILABLE FOR ON-SITE REVIEW AT ALL TIMES. USING CONFORMED DOCUMENTS AS A BASE, UTILIZE COLOR-CODED MARKUPS TO INDICATE FIELD MODIFICATIONS; RED TO INDICATE ADDED WORK OR REVISED LOCATIONS OF NEW WORK, GREEN FOR DELETED CONTENT, PURPLE FOR EXISTING CONDITIONS, AND BLUE FOR NON-TECHNICAL EXPLANATORY NOTES. YELLOW HIGHLIGHTING MAY BE USED TO INDICATE WORK COMPLETED AND IN FULL COMPLIANCE WITH THE CONFORMED SET.

ABBREVIATIONS

%	PERCENTAGE
2P	TWO POLE
A	AMPERES OR AMBER, OR AERATOR
AC	ABOVE COUNTER
ACS	ACCESS CONTROL STATION
AF	AMPERE FUSE
AFF	ABOVE FINISHED FLOOR
AFG	ABOVE FINISHED GRADE
AHJ	AUTHORITY HAVING JURISDICTION
AHU	AIR HANDLING UNIT
AI	ANALOG INPUT
AIC	AMPERES INTERRUPTING CURRENT
AIL	AMBER INDICATING LIGHT
AIR	ANALYSIS INDICATING RECORDER
AIT	ANALYSIS INDICATING TRANSMITTER
AL	ALUMINUM
ALT	ALTERNATE OR ALTERNATOR
AM	AMMETER
AMP	AMPERE
ANN	ANNUNCIATOR
AO	ANALOG OUTPUT
AS	AMPERE SWITCH
ATS	AUTOMATIC TRANSFER SWITCH
AUTO	AUTOMATIC
AUX	AUXILIARY
AWG	AMERICAN WIRE GAUGE
BAS	BUILDING AUTOMATION SYSTEM
BC	BARE COPPER
BKR	CIRCUIT BREAKER
BLDG	BUILDING
C	CONDUIT
CAT	CATEGORY
CB	CIRCUIT BREAKER
CH	COUNTER HEIGHT
CHG	CHARGER-BATTERY
CKT	CIRCUIT OR CIRCUIT BREAKER
CNTL	CONTROL
CP	CONTROL PANEL
CR	CONTROL RELAY OR CORROSION RESISTANT
CSI	CONTROL SYSTEM INTEGRATOR
CT	CURRENT TRANSFORMER
CU	COPPER OR CONDENSING UNIT
DB	DUCT BANK
DCMA	DIRECT CURRENT MILLIAMPERES
DI	DISCRETE INPUT
DIAG	DIAGRAM
DISC	DISCONNECT
DN	DOWN
DO	DISCRETE OUTPUT
DP	DISTRIBUTION PANEL
DS	DISCONNECT SWITCH
DWG(S)	DRAWING(S)
EC	ELECTRICAL CONTRACTOR
ECU	ENERGY CONTROL UNIT
EF	EXHAUST FAN
EH	ELECTRIC HEATER
EL	ELEVATION
EMER	EMERGENCY
EMT	ELECTRICAL METALLIC TUBING
ENCL	ENCLOSURE
ENET	ETHERNET
EP OR E	EXPLOSION PROOF
EQUIP	EQUIPMENT
ETM	ELAPSED TIME METER
ETR	EXISTING TO REMAIN
EUH	ELECTRIC UNIT HEATER
EWH	ELECTRIC WATER HEATER
EXDR	EXISTING DEVICE TO REMAIN
EXST	EXISTING
EXT	EXTERIOR
EXTN	EXTENSION
FA	FIRE ALARM
FACP	FIRE ALARM CONTROL PANEL
FAH	FLOW ALARM HIGH
FBC	FLORIDA BUILDING CODE
FCV	FLOW CONTROL VALVE
FDR	FEEDER
FE	FLOW ELEMENT
FI	FLOW INDICATOR
FIT	FLOW INDICATING TRANSMITTER
FMCP	FIRE ALARM & MASS NOTIFICATION CONTROL PANEL
FO	FIBER OPTIC
FQI	FLOW TOTALIZER
FT	FLOW TRANSMITTER
FV	FLOW VALVE
FVR	FULL VOLTAGE REVERSING
GB	GROUND BUS
GC	GENERAL CONTRACTOR
GEN	GENERATOR
GFCI	GROUND-FAULT CIRCUIT INTERRUPTER
GFI	GROUND-FAULT INTERRUPTING
GFP	GROUND-FAULT PROTECTION OF EQUIPMENT
GIL	GREEN INDICATING LIGHT
GND	GROUND
GRP	GROUP
GRS	GALVANIZED RIGID STEEL
H	HORN OR HIGH
HC	HAND CONTROL
HH	HANDHOLE
HOA	HAND-OFF-AUTO
HP	HORSEPOWER
HPS	HIGH PRESSURE SWITCH
HR	HAND RESET OR HOUR
HS	HAND SWITCH
HTR	HEATER
HZ	HERTZ
I	INTERLOCK
I/O	INPUT/OUTPUT
IC	ISOLATION CONTACTOR
IDS	INTRUSION DETECTION SYSTEM
IG	ISOLATED GROUND
INST	INSTANTANEOUS
INT	INTERVAL TIMER
INTLK	INTERLOCK
ISP	INSTRUMENT AND SAMPLE PANEL
JB	JUNCTION BOX
K	KEY
KCMIL	THOUSAND CIRCULAR MILS
KV	KILOVOLTS
KVA	KILOVOLT-AMPERES
KVAR	KILOVARS (REACTIVE KILOVOLT-AMPERES)
KW	KILOWATTS
KWH	KILOWATT HOUR
KY	TIME RELAY
LAH	HIGH LEVEL ALARM
LAL	LOW LEVEL ALARM
LC/C	LIGHTING CONTROL / CONTACTOR
LCP	LOCAL CONTROL PANEL
LCV	LEVEL CONTROL VALVE
LET	LEVEL ELEMENT TRANSMITTER
LF	LINEAR FEET
LI	LEVEL INDICATOR
LIC	LEVEL INDICATING CONTROLLER
LIR	LEVEL INDICATING RECORDER
LLH	LEVEL LAMP HIGH
LM	LUMEN
LOR	LOCAL-OFF-REMOTE
LOS	LOCK-OUT STOP
LP	LIGHTING PANEL
LR & L	LATCHING RELAY
LS	LEVEL SWITCH
LSH	LEVEL SWITCH HIGH
LSHL	LEVEL SWITCH HIGH/LOW
LSIG	LONG, SHORT, INSTANTANEOUS, GROUND
LSL	LEVEL SWITCH LOW
LT	LEVEL TRANSMITTER
LT	LEVEL TRANSMITTER OR LIGHT
LTFMC	LIQUID TIGHT FLEXIBLE METAL CONDUIT
LTG	LIGHTING
LTS	LIGHTING AND LIGHTS
LV	LOW VOLTAGE
LYR	LEVEL RELAY
M	MOTOR STARTER COIL OR CYCLE TIMER
mA	MILLIAMPERES
MAN	MANUAL
MAX	MAXIMUM
MCB	MAIN CIRCUIT BREAKER
MCC	MOTOR CONTROL CENTER
MCM	THOUSAND CIRCULAR MILS
MCP	MAIN CONTROL PANEL
MCP	MOTOR CIRCUIT PROTECTOR
MDP	MAIN DISTRIBUTION PANEL
MH	MANHOLE
MIN	MINUTE, MINIMUM
MIN	MINUTES OR MINIMUM
MLO	MAIN LUGS ONLY
MM	MULTIMODE
MPC	MINI POWER CENTER
MS	MAGNETIC STARTER
MS	MANUAL MOTOR STARTER
MTR	MOTOR
MTS	MANUAL TRANSFER SWITCH
mV	MILLIVOLTS
N	NEUTRAL
N/A	NOT APPLICABLE
N1	NEMA 1 ENCLOSURE
N12	NEMA 12 ENCLOSURE
N3R	NEMA 3R ENCLOSURE
NA	NON-AUTO
NC	NORMALLY CLOSED
NEC	NATIONAL ELECTRICAL CODE
NEMA	NATIONAL ELECTRICAL MANUFACTURERS ASSOCIATION
NEUT	NEUTRAL
NF	NON-FUSED
NFPA	NATIONAL FIRE PROTECTION ASSOCIATION
NO	NORMALLY OPEN
NU	NUMBER
NP	NAMEPLATE
NTS	NOT TO SCALE
OC	OPEN/CLOSE
OL	OVERLOAD
OLR	OVERLOAD RELAY
OO	ON-OFF
OOR	ON-OFF RESET
OUT	OUTPUT
P&ID	PROCESS & INSTRUMENTATION DIAGRAM
PC	PHOTOELECTRIC CELL
PCV	PRESSURE CONTROL VALVE
PDT	PRESSURE DIFFERENTIAL TRANSMITTER
PC	PHOTOELECTRIC CELL
PE	PRESSURE ELEMENT
PH	PHASE
PI	PRESSURE INDICATOR
PIT	PRESSURE INDICATING TRANSMITTER
PLC	PROGRAMMABLE LOGIC CONTROLLER
PM	PHASE MONITOR
PMP	PUMP
PNL	PANEL
POE	POWER OVER ETHERNET
PP	POWER PANEL
PR	SHIELDED PAIR
PRI	PRIMARY
PSH	PRESSURE SWITCH HIGH
PSI	POUNDS PER SQUARE INCH
PSL	PRESSURE SWITCH LOW
PVC	POLYVINYL CHLORIDE CONDUIT
R	RED, RELAY, OR RUN
RCP	REFLECTED CEILING PLAN
RE	RELOCATE
RECEPT	RECEPTACLE
REF	REFERENCE
RGA	RIGID GALVANIZED ALUMINUM
RGS	RIGID GALVANIZED STEEL
RIL	RED INDICATING LIGHT
RIO	REMOTE I/O PANEL
RM	ROOM
RP	REPLACE
RTD	RESISTANCE TEMPERATURE DETECTOR
RTM	RUNNING TIME METER
RTU	REMOTE TELEMETRY UNIT
RVNR	REDUCED VOLTAGE, NON REVERSING
RVS	REDUCED VOLTAGE STARTER
RVSS	REDUCED VOLTAGE SOFT STARTER
S	START CONTACTOR
S, SEC	SECOND
S2	NEMA SIZE 2 STARTER
SC	SPEED CONTROL;
SEC	SECONDARY OR SECONDS
SEL	SELECTOR
SER	SERVICE ENTRANCE RATED
SH	SHEET OR SHIELDED
SM	SINGLE MODE
SPD	SURGE PROTECTION DEVICE
SPEC	SPECIFICATION
SS	SELECTOR SWITCH OR STAINLESS STEEL
SSSS	SOLID STATE SOFT START
STP	SHIELDED TWISTED PAIR
SV	SOLENOID VALVE
SWBD	SWITCHBOARD
T	THERMOSTAT
TB	TERMINAL BOX, TERMINAL BLOCK
TDR	TIME DELAY RELAY
TEL	TELEPHONE
TI	TEMPERATURE INDICATOR
TO	TIME DELAY OPENING CONTACT OR THERMAL OVERLOAD
TOA	TEST-OFF-AUTO
TSP	TWISTED SHIELDED PAIR
TYP	TYPICAL
UA	COMMON ALARM
UE	UNDERGROUND ELECTRIC
UG	UNDERGROUND
UL	UNDERWRITERS LABORATORIES
UNO	UNLESS NOTED OTHERWISE
UP	UTILITY POWER
UPS	UNINTERRUPTIBLE POWER SUPPLY
UT	UNDERGROUND TELECOMMUNICATIONS
V	VOLTS
VA	VOLT AMPS
VAC	VOLTS ALTERNATING CURRENT
VDC	VOLTS DIRECT CURRENT
VFD	VARIABLE FREQUENCY DRIVE
VM	VOLTMETER
W	WIRE, WATTS
W/	WITH
W/O	WITHOUT
WAP	WIRELESS ACCESS PORT
WI	WEIGHT INDICATOR
WP	WEATHERPROOF
XFMR	TRANSFORMER
XLP	CROSS-LINKED POLYETHYLENE
XP	EXPLOSION-PROOF
YC	STATUS CONTROL
YL	STATUS INDICATION
ZS	POSITION SWITCH
ZSC	POSITION SWITCH CLOSED
ZSO	POSITION SWITCH OPEN

TETRA TECH
ENGINEERING BUSINESS NO. 2429
www.tetratech.com
10600 CHEVROLET WAY, SUITE 102
ESTERO, FLORIDA 33928
PHONE: (239) 390-1467 FAX: (239) 390-1769

BID SET

CITY OF SANIBEL
800 Dunlop Road
Sanibel, Florida 33957

MARK	DATE	DESCRIPTION	BY

THE CITY OF SANIBEL
LIFT STATION CONTROL PANELS

ELECTRICAL LEGEND

Project No.:	200-08498-24002
Designed By:	JAS
Drawn By:	JAS
Checked By:	JDM

E-003

Bar Measures 1 inch

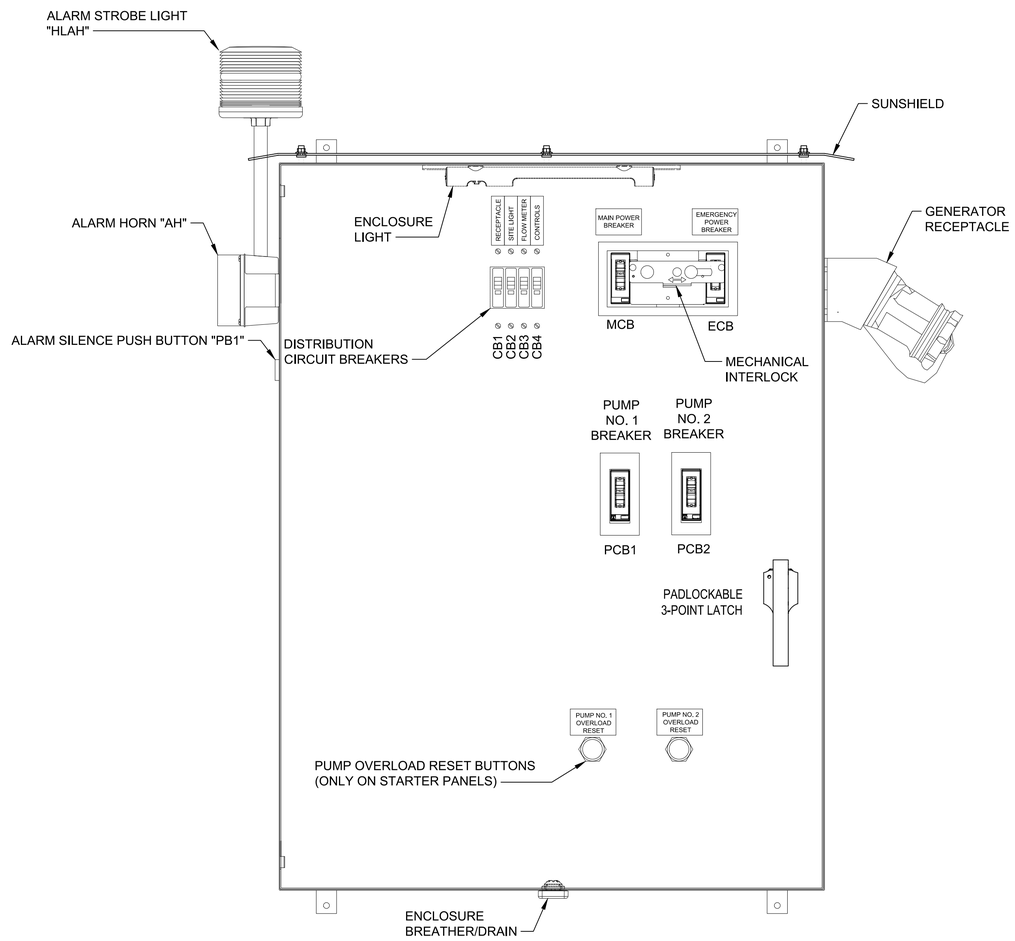

INNER DOOR LAYOUT

DUPLEX LIFT STATION PANEL ENCLOSURE:
48"H x 36"W x 12"D NEMA 4X RATED, FABRICATED
FROM 14 GAUGE TYPE 316 STAINLESS STEEL WITH WHITE POWDER COAT FINISH.
OUTER DOOR IS FITTED WITH A PADLOCKABLE 3-POINT LATCH.
PANEL PROVIDED WITH SUNSHIELD.

BACK PANEL:
45"H x 33"W FABRICATED FROM 12ga. CARBON STEEL WITH WHITE
POLYESTER POWDER COAT FINISH.

DUPLEX LIFT STATION PUMP CONTROL PANEL (POWER PANEL) LAYOUT

SCALE: NTS

TETRA TECH
ENGINEERING BUSINESS NO. 2429
www.tetratech.com
10600 CHEVROLET WAY, SUITE 102
ESTERO, FLORIDA 33928
PHONE: (239) 390-1467 FAX: (239) 390-1769

BID SET

CITY OF SANIBEL
800 Dunlop Road
Sanibel, Florida 33957

MARK	DATE	DESCRIPTION	BY

THE CITY OF SANIBEL
LIFT STATION CONTROL PANELS
PUMP CONTROL PANEL (POWER PANEL) LAYOUT

Project No.:	200-08498-24002
Designed By:	JAS
Drawn By:	JAS
Checked By:	JDM

E-301
Sheet

Bar Measures 1 inch

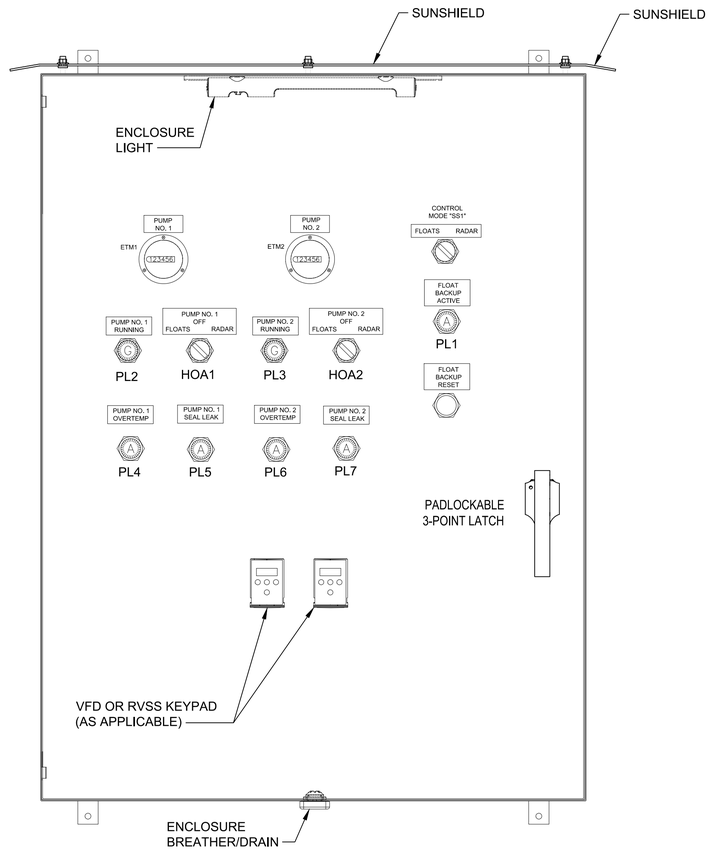

RTU PANEL ENCLOSURE:
48"H x 36"W x 12"D NEMA 4X RATED, FABRICATED
FROM 14 GAUGE TYPE 316 STAINLESS STEEL WITH WHITE POWDER COAT FINISH.
OUTER DOOR IS FITTED WITH A PADLOCKABLE 3-POINT LATCH.

BACK PANEL:
45"H x 33"W FABRICATED FROM 12ga. CARBON STEEL WITH WHITE
POLYESTER POWDER COAT FINISH.

DUPLEX LIFT STATION PUMP CONTROL PANEL (CONTROLS PANEL) LAYOUT

SCALE: NTS

TETRA TECH
ENGINEERING BUSINESS NO. 2429
www.tetratech.com
10600 CHEVROLET WAY, SUITE 102
ESTERO, FLORIDA 33928
PHONE: (239) 390-1467 FAX: (239) 390-1769

BID SET

CITY OF SANIBEL
800 Dunlop Road
Sanibel, Florida 33957

MARK	DATE	DESCRIPTION	BY

THE CITY OF SANIBEL
LIFT STATION CONTROL PANELS
PUMP CONTROL PANEL (CONTROLS PANEL) LAYOUT

Project No.:	200-08498-24002
Designed By:	JAS
Drawn By:	JAS
Checked By:	JDM

E-302
Sheet

Bar Measures 1 inch

4/3/2025 3:37:24 PM - O:\PROJECTS\ORLANDO\IER\08498\200-08498-24002\CAD\SHEETFILES\E-302 RTU PANEL LAYOUT.DWG - SEIGNORET, JASON

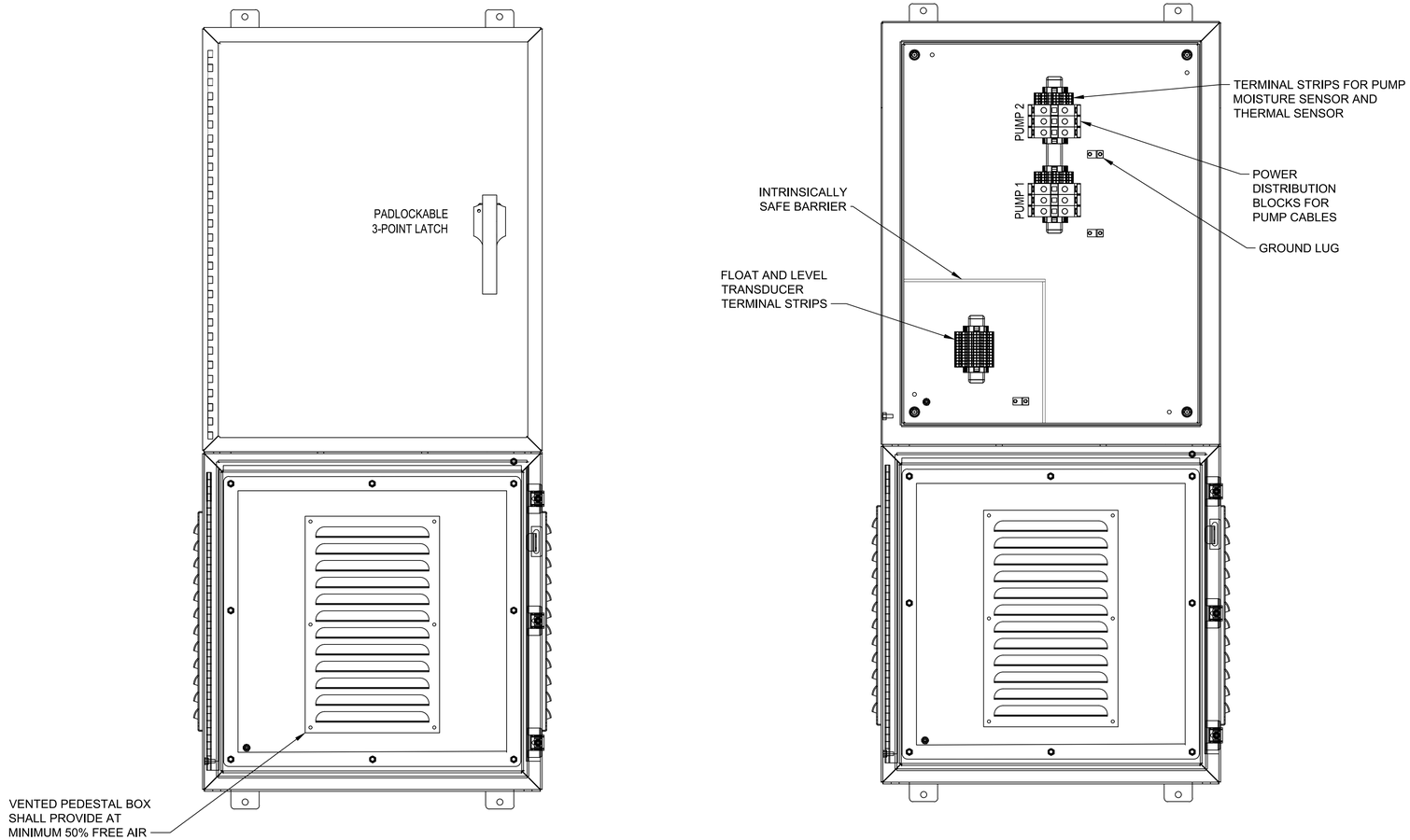

TERMINAL CABINET ENCLOSURE:
30"H x 24"W x 12"D NEMA 4X RATED, FABRICATED
FROM 14 GAUGE TYPE 316 STAINLESS STEEL, WHITE POWDER COAT FINISH.
OUTER DOOR IS FITTED WITH A PADLOCKABLE 3-POINT LATCH.

BACK PANEL:
27"H x 21"W FABRICATED FROM 12ga. CARBON STEEL WITH WHITE
POLYESTER POWDER COAT FINISH.

VENTED PEDESTAL BOX:
24"H x 24"W x 12"D NEMA 4X RATED, FABRICATED
FROM 14 GAUGE TYPE 316 STAINLESS STEEL. OUTER DOOR IS FITTED WITH SCREW DOWN CLAMPS AND PAD LOCK HASP. PROVIDE PEDESTAL BOX WITH LOUVER PLATE KITS ON (15.3"H X 9.5"W) 316 STAINLESS STEEL, WHITE POWDER COAT FINISH, FRONT, BACK AND SIDES OF ENCLOSURE. PROVIDE VENTS ON ALL SIDES TO ALLOW 50% FREE AIR WITHIN ENCLOSURE.

TERMINATION CABINET AND PEDESTAL

SCALE: NTS

TETRA TECH
ENGINEERING BUSINESS NO. 2429
www.tetratech.com
10600 CHEVROLET WAY, SUITE 102
ESTERO, FLORIDA 33928
PHONE: (239) 390-1467 FAX: (239) 390-1769

BID SET

CITY OF SANIBEL
800 Dunlop Road
Sanibel, Florida 33957

MARK	DATE	DESCRIPTION	BY

THE CITY OF SANIBEL
LIFT STATION CONTROL PANELS
TERMINATION CABINET AND PEDESTAL BOX

Project No.:	200-08498-24002
Designed By:	JAS
Drawn By:	JAS
Checked By:	JDM

E-303
Sheet

Bar Measures 1 inch

4/3/2025 3:37:29 PM - O:\PROJECTS\ORLANDO\ER\08498\200-08498-24002\CAD\SHEETFILES\E-302 RTU PANEL LAYOUT.DWG - SEIGNORET, JASON

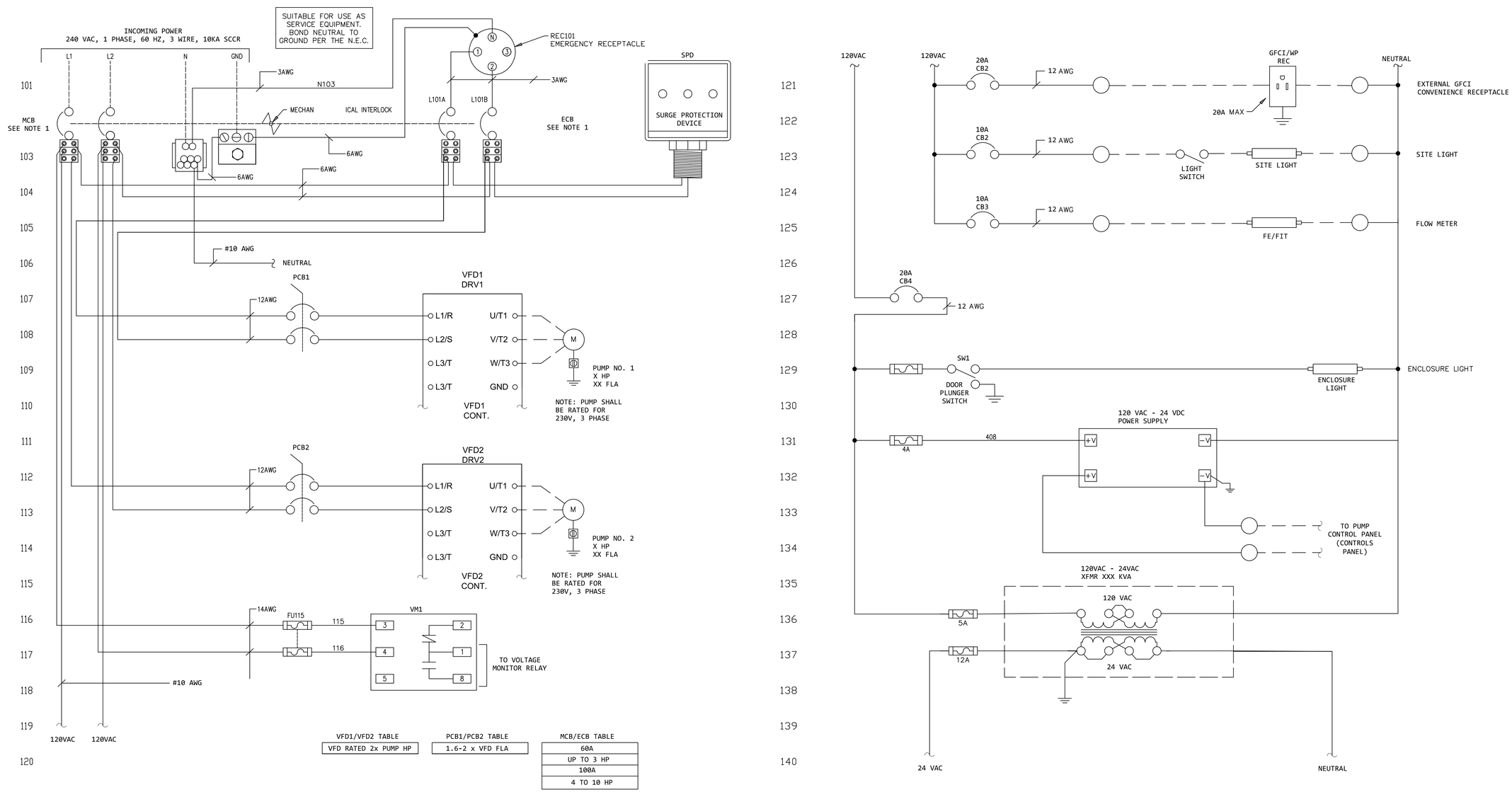

VFD1/VFD2 TABLE
VFD RATED 2x PUMP HP

PCB1/PCB2 TABLE
1.6-2 x VFD FLA

MCB/ECB TABLE
60A
UP TO 3 HP
100A
4 TO 10 HP

240V, 1 PHASE, VFD
PUMP CONTROL PANEL (POWER PANEL) WIRING DIAGRAM

SCALE: NTS

TETRA TECH
ENGINEERING BUSINESS NO. 2429
www.tetratech.com
10600 CHEVROLET WAY, SUITE 102
ESTERO, FLORIDA 33928
PHONE: (239) 390-1467 FAX: (239) 390-1769

BID SET

CITY OF SANIBEL
800 Dunlop Road
Sanibel, Florida 33957

MARK	DATE	DESCRIPTION	BY

THE CITY OF SANIBEL
LIFT STATION CONTROL PANELS
240V, 1 PHASE, VFD
CONTROL PANEL (POWER)
WIRING DIAGRAM

Project No.:	200-08498-24002
Designed By:	JAS
Drawn By:	JAS
Checked By:	JDM

E-311
Sheet

Bar Measures 1 inch

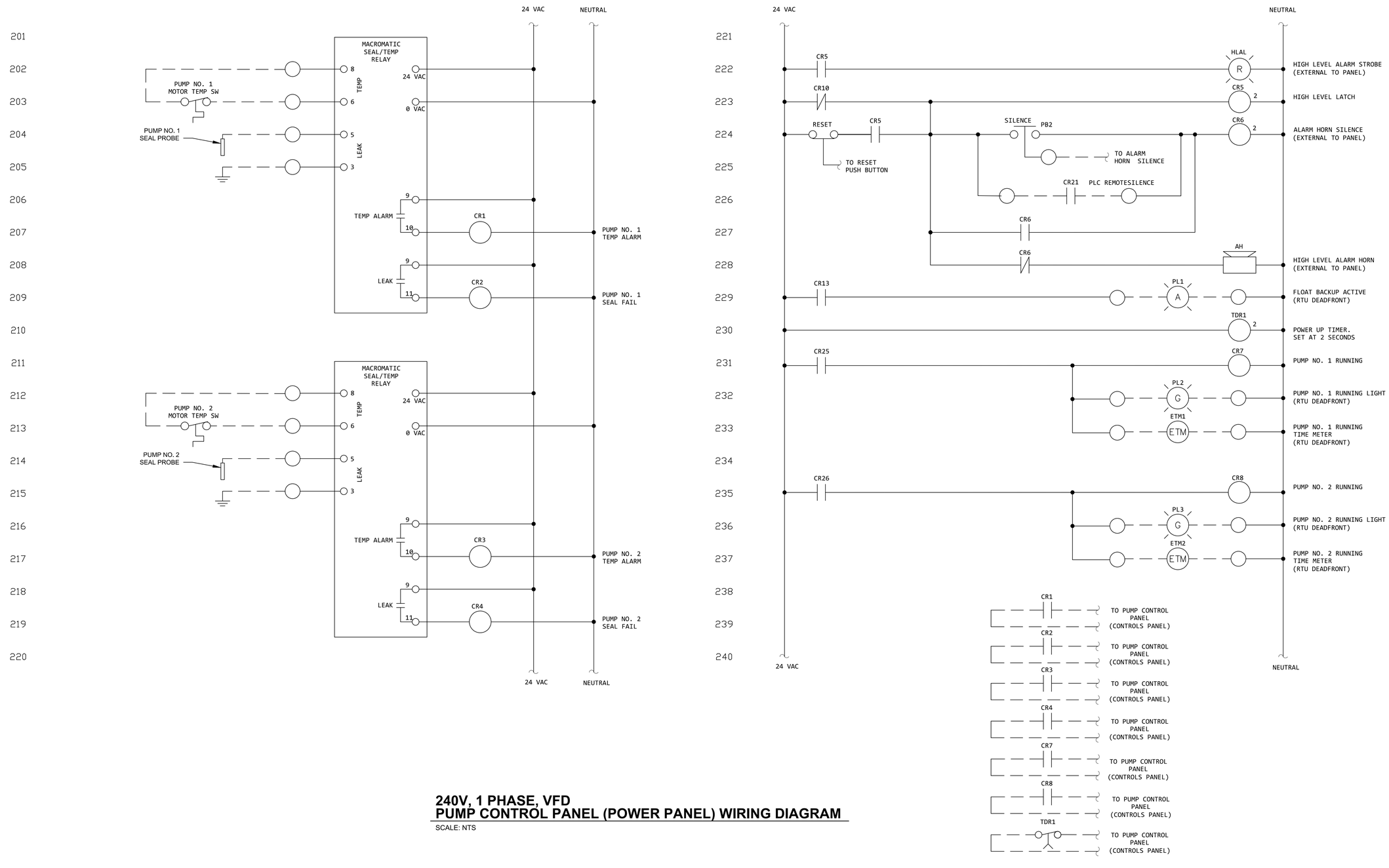

240V, 1 PHASE, VFD
PUMP CONTROL PANEL (POWER PANEL) WIRING DIAGRAM

SCALE: NTS

TETRA TECH
ENGINEERING BUSINESS NO. 2429
www.tetratech.com
10600 CHEVROLET WAY, SUITE 102
ESTERO, FLORIDA 33928
PHONE: (239) 390-1467 FAX: (239) 390-1769

BID SET

CITY OF SANIBEL
800 Dunlop Road
Sanibel, Florida 33957

MARK	DATE	DESCRIPTION	BY

THE CITY OF SANIBEL
LIFT STATION CONTROL PANELS

240V, 1 PHASE, VFD CONTROL PANEL (POWER) WIRING DIAGRAM

Project No.:	200-08498-24002
Designed By:	JAS
Drawn By:	JAS
Checked By:	JDM

E-312
Sheet

Bar Measures 1 inch

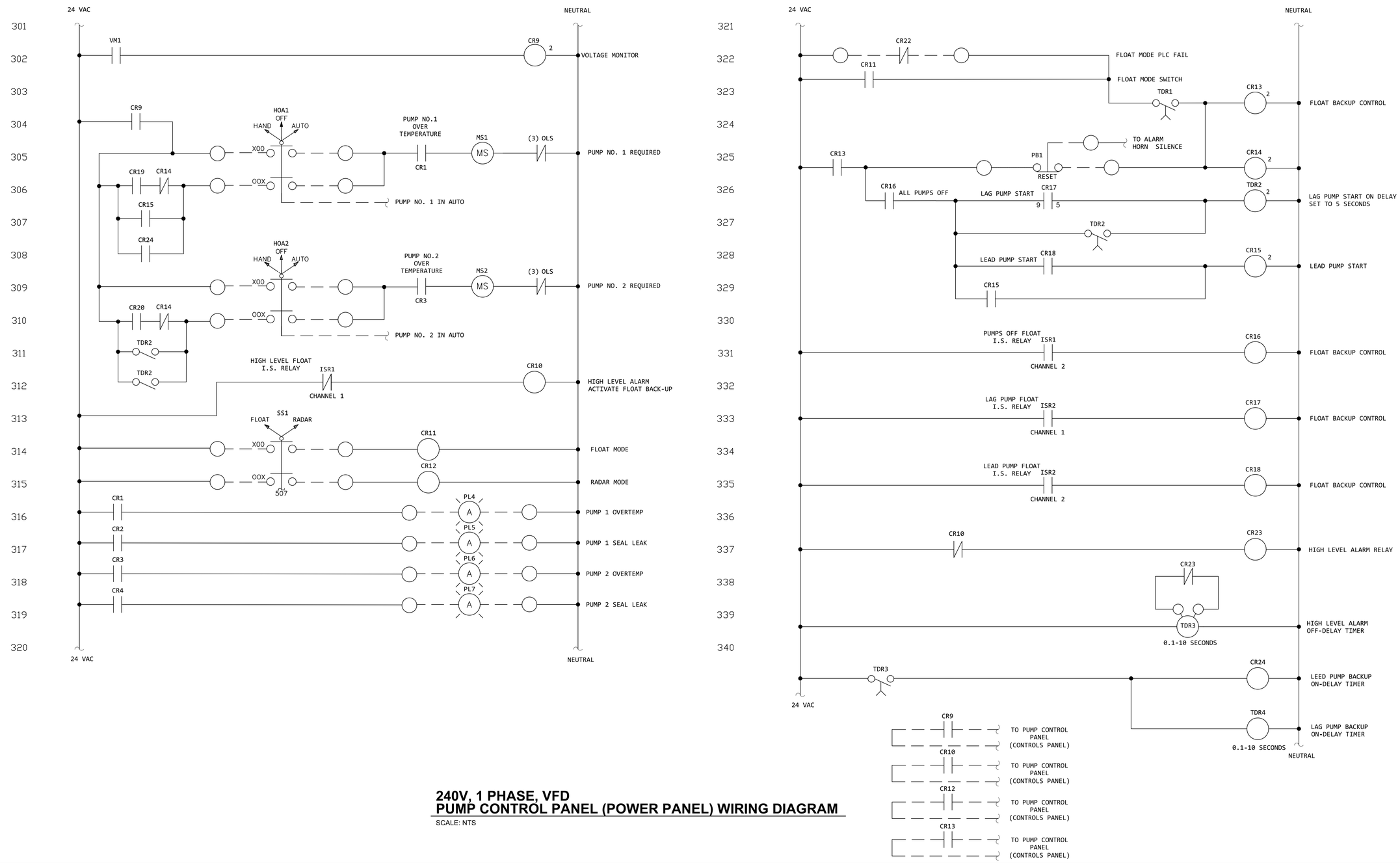

240V, 1 PHASE, VFD PUMP CONTROL PANEL (POWER PANEL) WIRING DIAGRAM

SCALE: NTS

TETRA TECH
ENGINEERING BUSINESS NO. 2429
www.tetratech.com
10600 CHEVROLET WAY, SUITE 102
ESTERO, FLORIDA 33928
PHONE: (239) 390-1467 FAX: (239) 390-1769

BID SET

CITY OF SANIBEL
800 Dunlop Road
Sanibel, Florida 33957

MARK	DATE	DESCRIPTION	BY

THE CITY OF SANIBEL
LIFT STATION CONTROL PANELS

240V, 1 PHASE, VFD CONTROL PANEL (POWER) WIRING DIAGRAM

Project No.:	200-08498-24002
Designed By:	JAS
Drawn By:	JAS
Checked By:	JDM

E-313
Sheet

Bar Measures 1 inch

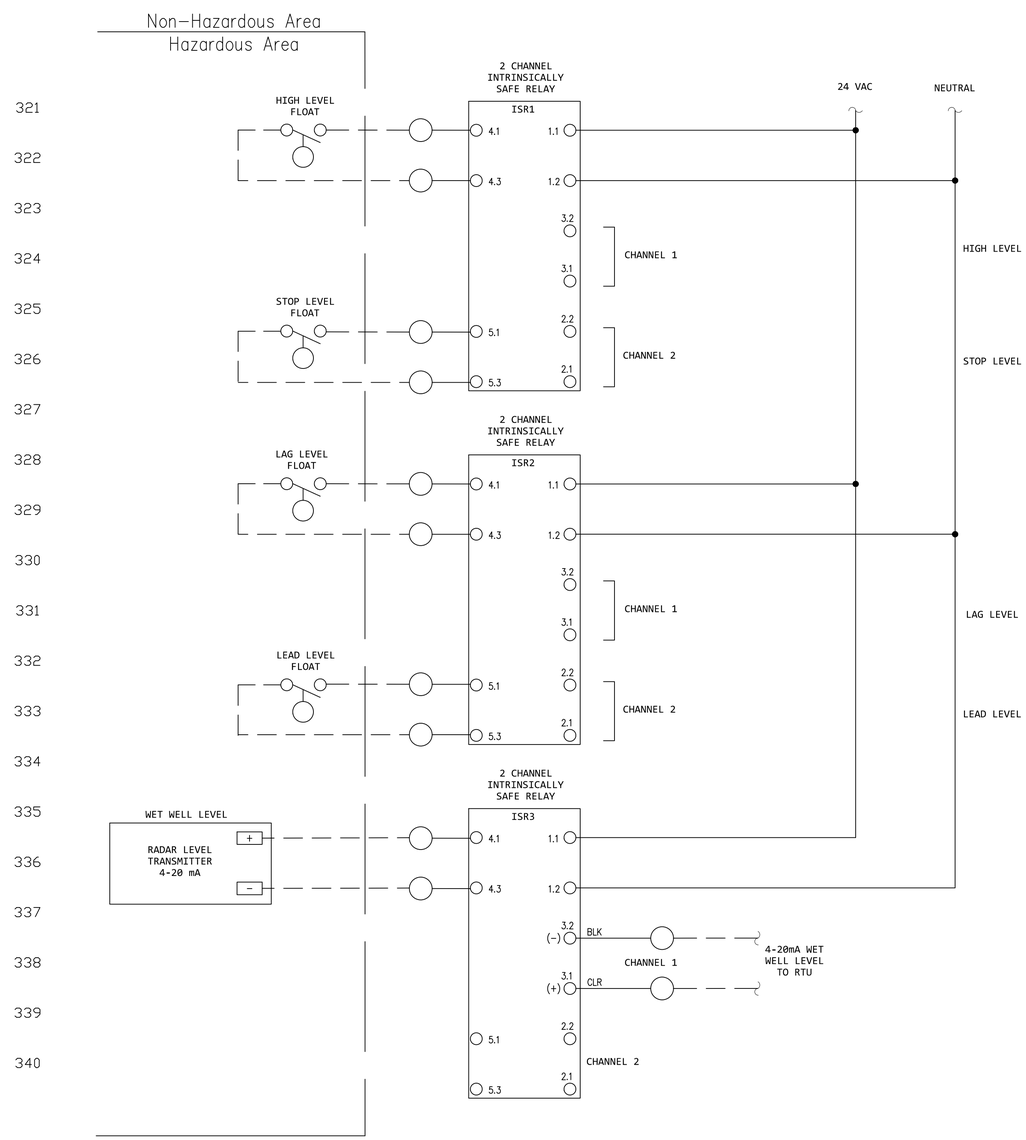

240V, 1 PHASE, VFD
PUMP CONTROL PANEL (POWER PANEL) WIRING DIAGRAM

SCALE: NTS

TETRA TECH
ENGINEERING BUSINESS NO. 2429
www.tetratech.com
10600 CHEVROLET WAY, SUITE 102
ESTERO, FLORIDA 33928
PHONE: (239) 390-1467 FAX: (239) 390-1769

BID SET

CITY OF SANIBEL
800 Dunlop Road
Sanibel, Florida 33957

MARK	DATE	DESCRIPTION	BY

THE CITY OF SANIBEL
LIFT STATION CONTROL PANELS
240V, 1 PHASE, VFD CONTROL PANEL (POWER) WIRING DIAGRAM

Project No.:	200-08498-24002
Designed By:	JAS
Drawn By:	JAS
Checked By:	JDM

E-314
Sheet

Bar Measures 1 inch

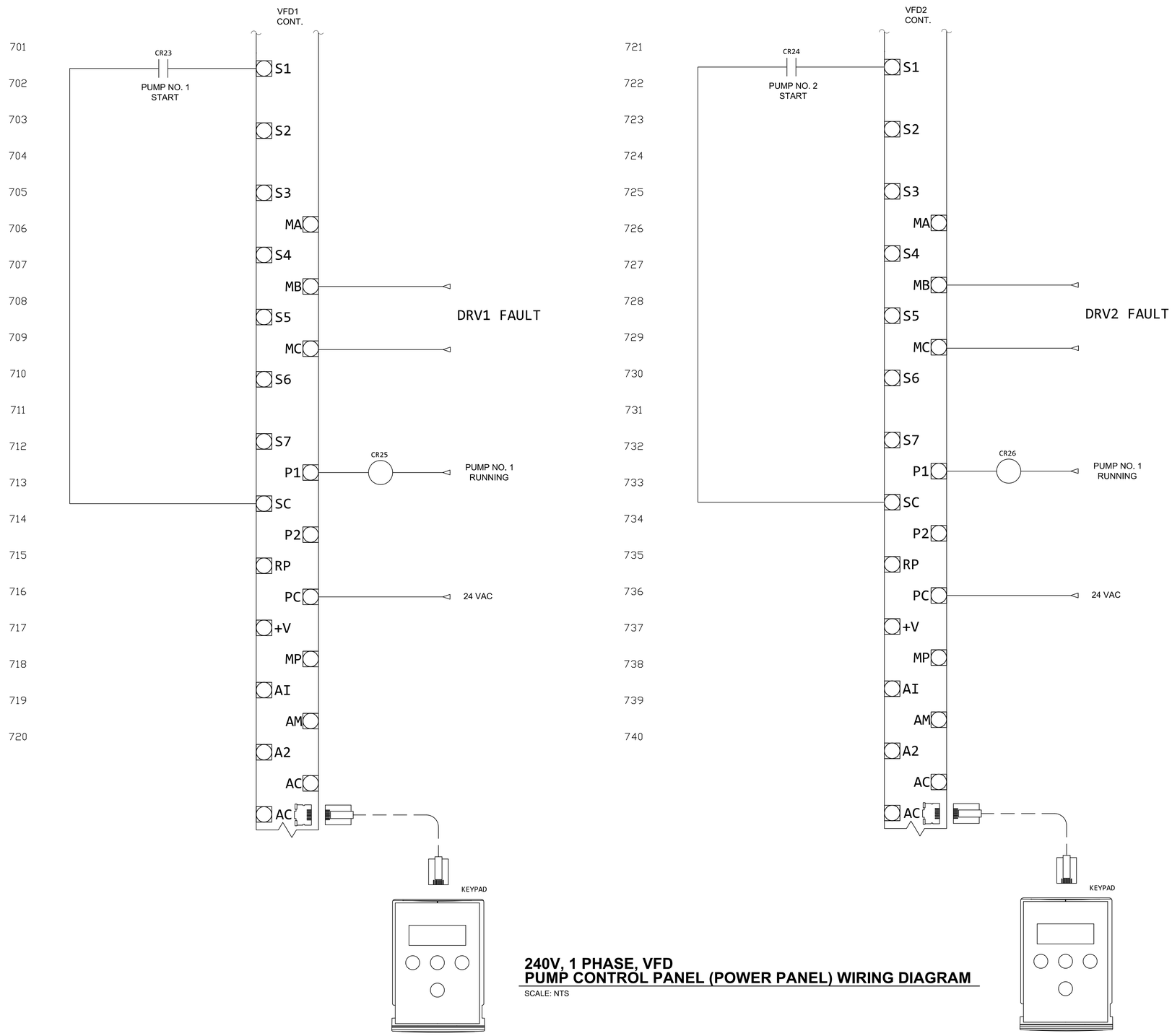

240V, 1 PHASE, VFD
PUMP CONTROL PANEL (POWER PANEL) WIRING DIAGRAM

SCALE: NTS

TETRA TECH
ENGINEERING BUSINESS NO. 2429
www.tetratech.com
10600 CHEVROLET WAY, SUITE 102
ESTERO, FLORIDA 33928
PHONE: (239) 390-1467 FAX: (239) 390-1769

BID SET

CITY OF SANIBEL
800 Dunlop Road
Sanibel, Florida 33957

MARK	DATE	DESCRIPTION	BY

THE CITY OF SANIBEL
LIFT STATION CONTROL PANELS
240V, 1 PHASE, VFD
CONTROL PANEL (POWER)
WIRING DIAGRAM

Project No.:	200-08498-24002
Designed By:	JAS
Drawn By:	JAS
Checked By:	JDM

E-315
Sheet

Bar Measures 1 inch

4/3/2025 3:37:42 PM - O:\PROJECTS\ORLANDO\IER\08498\200-08498-24002\CAD\SHEETFILES\E-311 - 230V, SINGLE PHASE, WIRING DIAGRAM, VFD.DWG - SEIGNORET, JASON

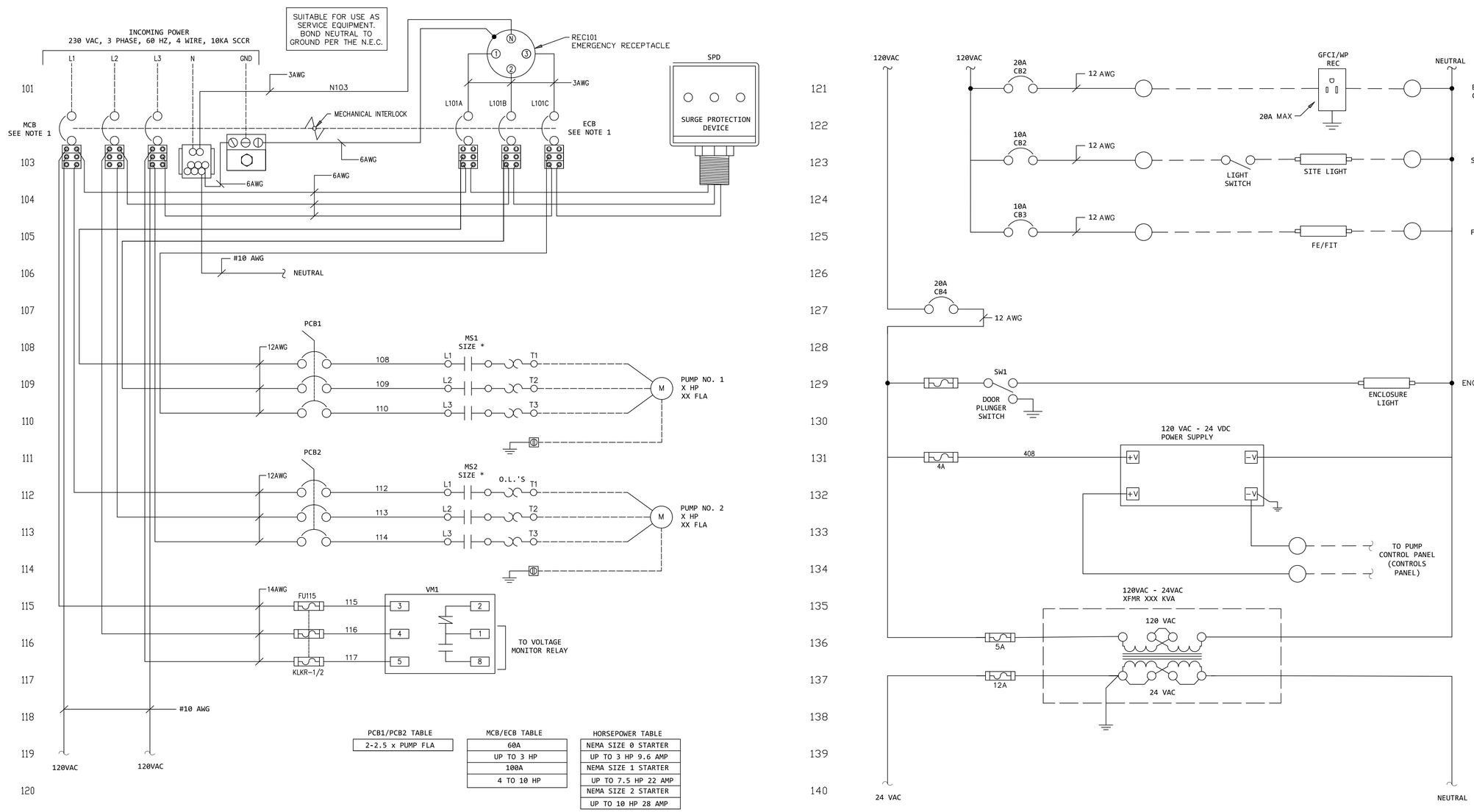

PCB1/PCB2 TABLE
2-2.5 x PUMP FLA

MCB/ECB TABLE
60A
UP TO 3 HP
100A
4 TO 10 HP

HORSEPOWER TABLE
NEMA SIZE 0 STARTER
UP TO 3 HP 9.6 AMP
NEMA SIZE 1 STARTER
UP TO 7.5 HP 22 AMP
NEMA SIZE 2 STARTER
UP TO 10 HP 28 AMP

230V, 3 PHASE, STARTER
PUMP CONTROL PANEL (POWER PANEL) WIRING DIAGRAM

SCALE: NTS

TETRA TECH
ENGINEERING BUSINESS NO. 2429
www.tetratech.com
10600 CHEVROLET WAY, SUITE 102
ESTERO, FLORIDA 33928
PHONE: (239) 390-1467 FAX: (239) 390-1769

BID SET

CITY OF SANIBEL
800 Dunlop Road
Sanibel, Florida 33957

MARK	DATE	DESCRIPTION	BY

THE CITY OF SANIBEL
LIFT STATION CONTROL PANELS
230V, THREE PH, STARTER CONTROL PANEL (POWER) WIRING DIAGRAM

Project No.:	200-08498-24002
Designed By:	JAS
Drawn By:	JAS
Checked By:	JDM

E-321
Sheet

Bar Measures 1 inch

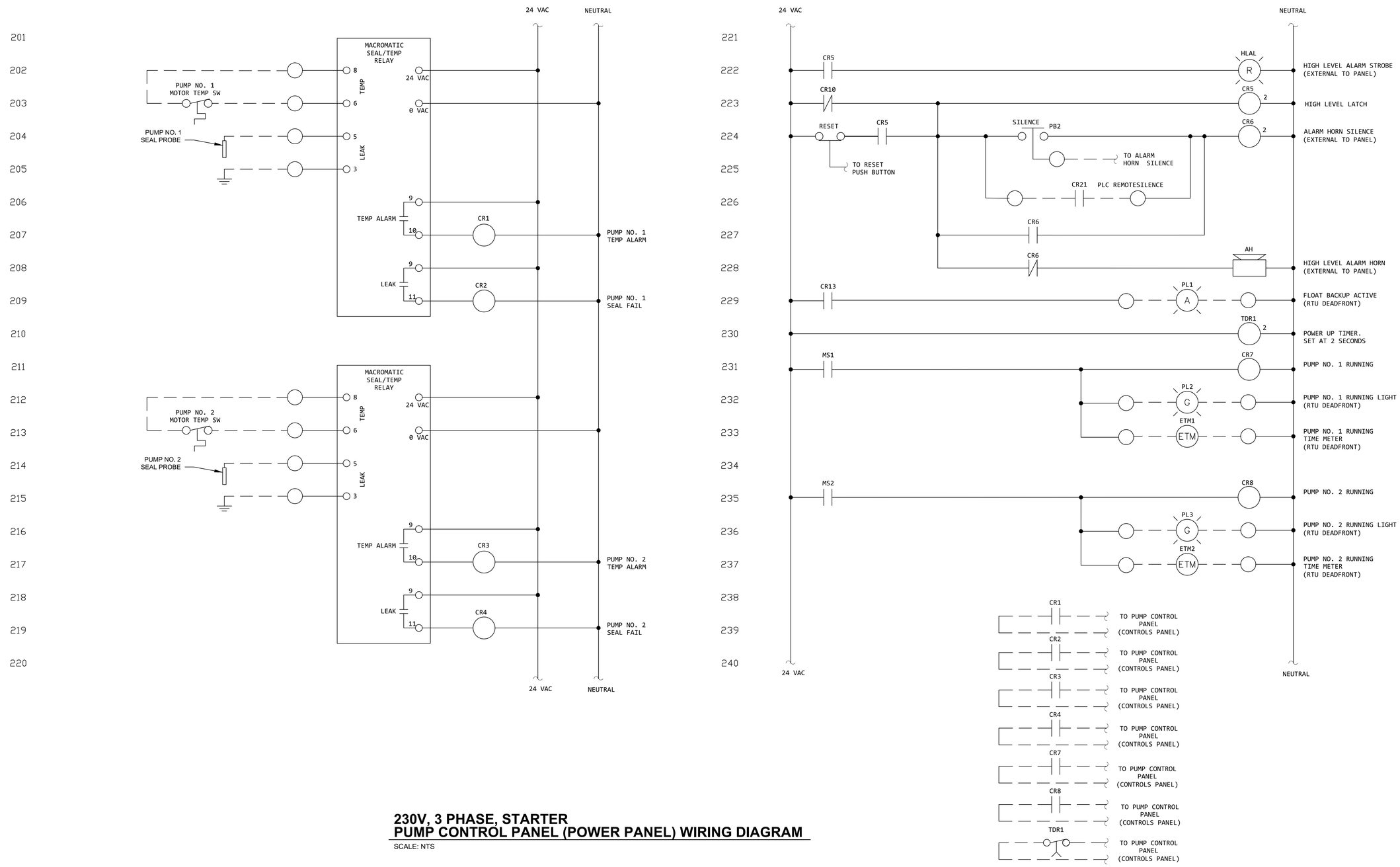

230V, 3 PHASE, STARTER
PUMP CONTROL PANEL (POWER PANEL) WIRING DIAGRAM

SCALE: NTS

TETRA TECH
ENGINEERING BUSINESS NO. 2429
www.tetratech.com
10600 CHEVROLET WAY, SUITE 102
ESTERO, FLORIDA 33928
PHONE: (239) 390-1467 FAX: (239) 390-1769

BID SET

CITY OF SANIBEL
800 Dunlop Road
Sanibel, Florida 33957

MARK	DATE	DESCRIPTION	BY

THE CITY OF SANIBEL
LIFT STATION CONTROL PANELS
230V, THREE PH, STARTER CONTROL PANEL (POWER) WIRING DIAGRAM

Project No.:	200-08498-24002
Designed By:	JAS
Drawn By:	JAS
Checked By:	JDM

E-322
Sheet

Bar Measures 1 inch

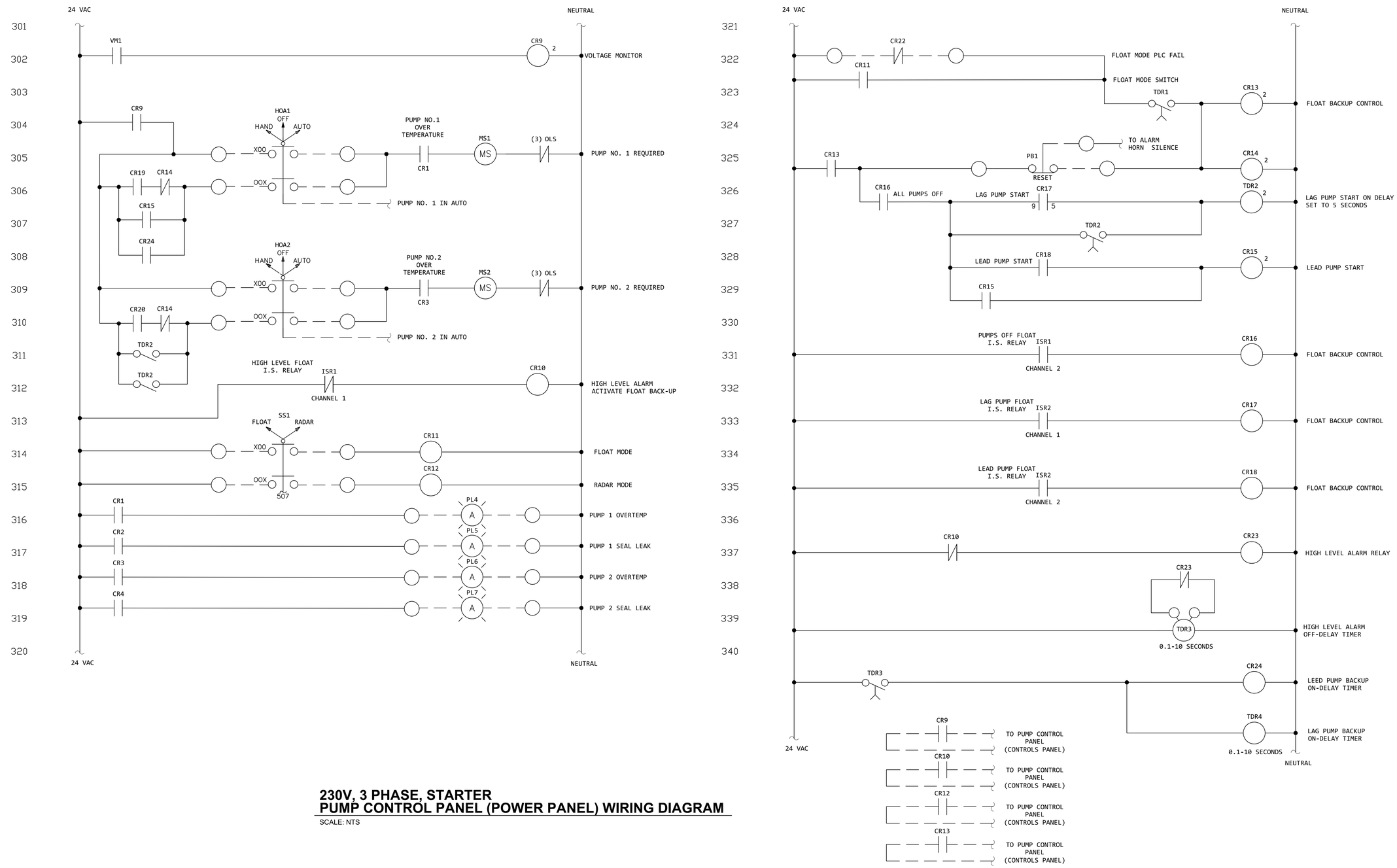

230V, 3 PHASE, STARTER PUMP CONTROL PANEL (POWER PANEL) WIRING DIAGRAM

SCALE: NTS

TETRA TECH
ENGINEERING BUSINESS NO. 2429
www.tetratech.com
10600 CHEVROLET WAY, SUITE 102
ESTERO, FLORIDA 33928
PHONE: (239) 390-1467 FAX: (239) 390-1769

BID SET

CITY OF SANIBEL
800 Dunlop Road
Sanibel, Florida 33957

MARK	DATE	DESCRIPTION	BY

THE CITY OF SANIBEL
LIFT STATION CONTROL PANELS

230V, THREE PH, STARTER CONTROL PANEL (POWER) WIRING DIAGRAM

Project No.:	200-08498-24002
Designed By:	JAS
Drawn By:	JAS
Checked By:	JDM

E-323
Sheet

Bar Measures 1 inch

4/3/2025 3:37:50 PM - O:\PROJECTS\ORLANDO\IER\08498\200-08498-24002\CAD\SHEETFILES\E-321 - 230V, THREE PHASE, WIRING DIAGRAM, STARTER.DWG - SEIGNORET, JASON

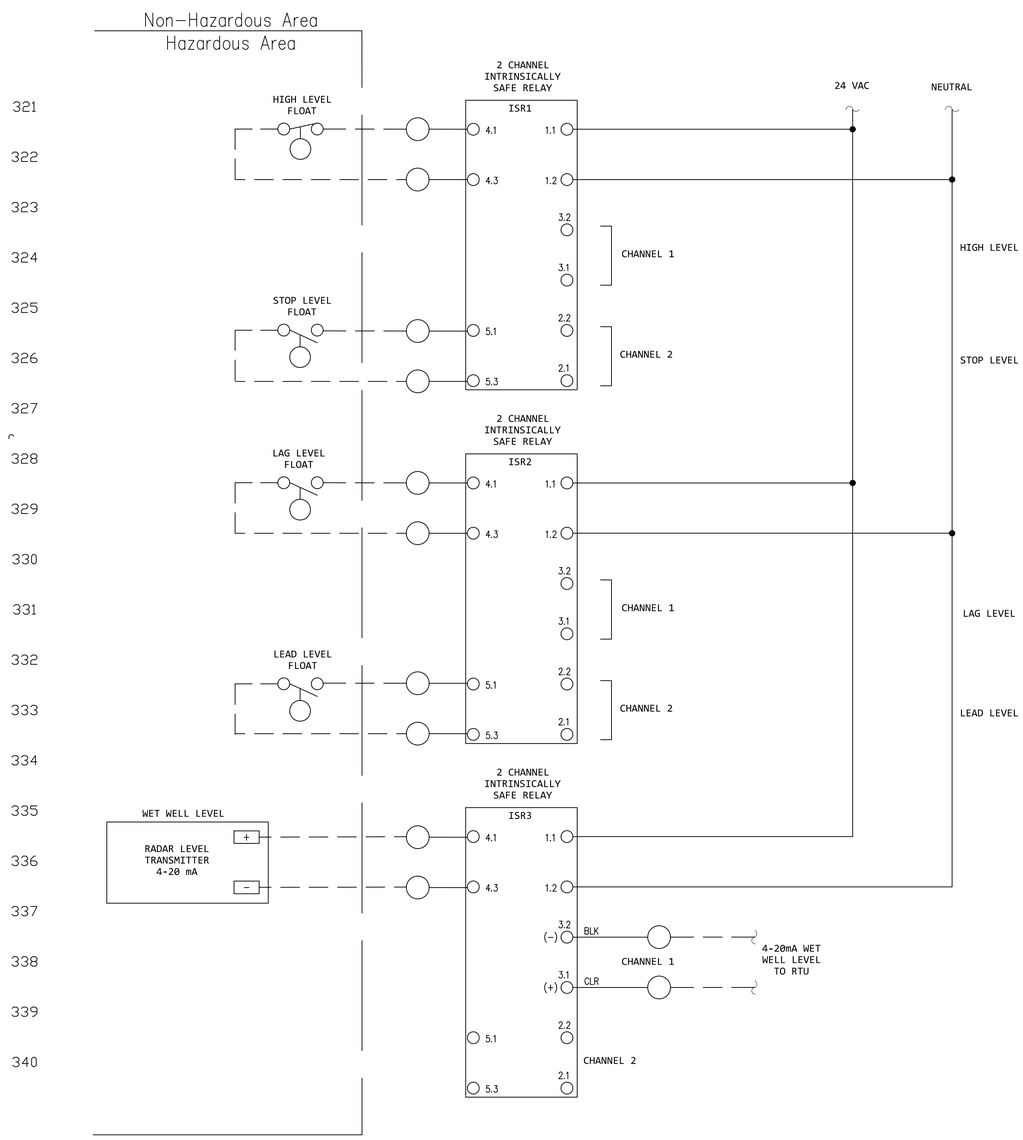

230V, 3 PHASE, STARTER PUMP CONTROL PANEL (POWER PANEL) WIRING DIAGRAM

SCALE: NTS

TETRA TECH
ENGINEERING BUSINESS NO. 2429
www.tetratech.com
10600 CHEVROLET WAY, SUITE 102
ESTERO, FLORIDA 33928
PHONE: (239) 390-1467 FAX: (239) 390-1769

BID SET

CITY OF SANIBEL
800 Dunlop Road
Sanibel, Florida 33957

MARK	DATE	DESCRIPTION	BY

THE CITY OF SANIBEL
LIFT STATION CONTROL PANELS
230V, THREE PH, STARTER CONTROL PANEL (POWER) WIRING DIAGRAM

Project No.:	200-08498-24002
Designed By:	JAS
Drawn By:	JAS
Checked By:	JDM

E-324
Sheet

Bar Measures 1 inch

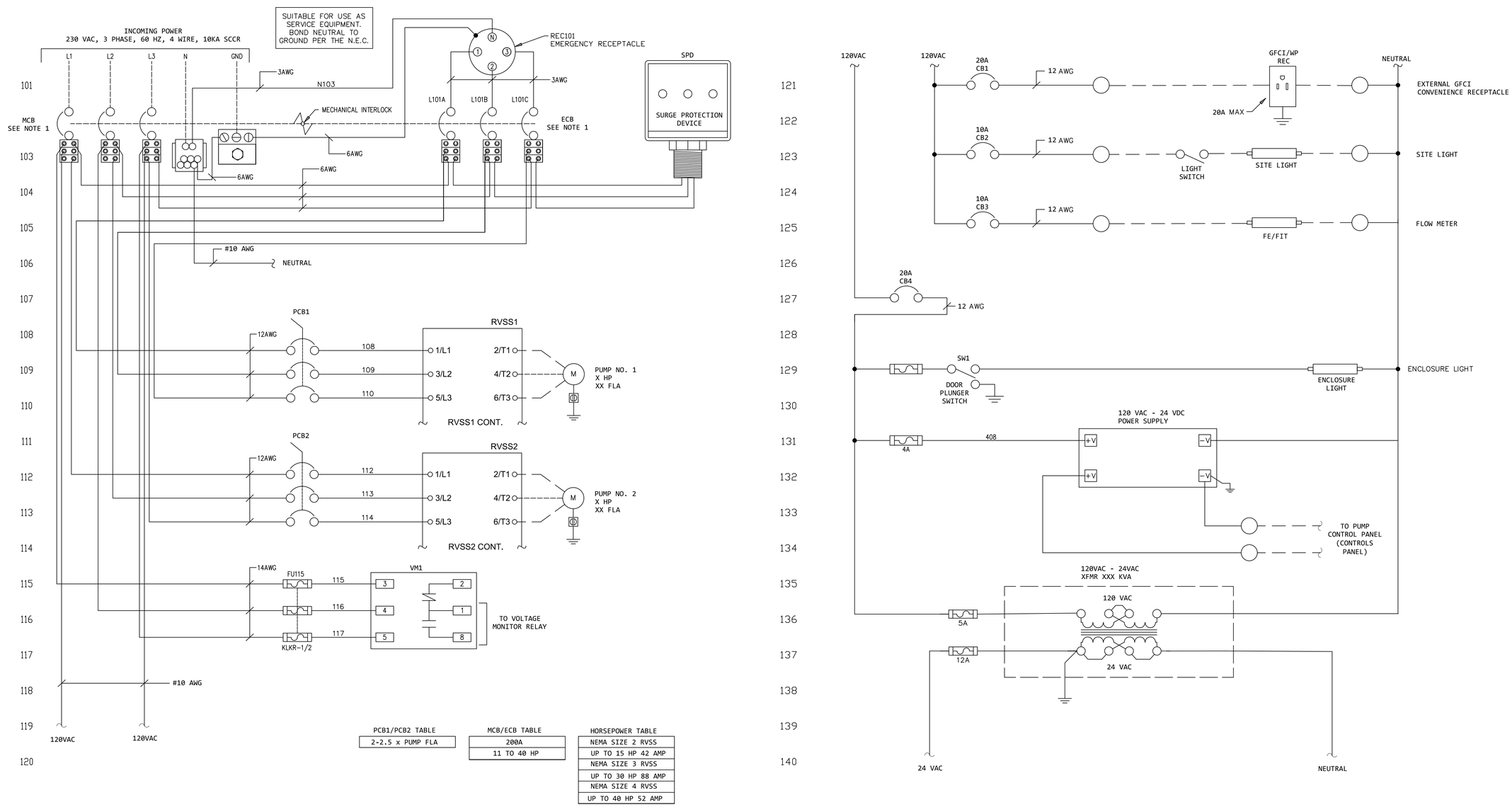

PCB1/PCB2 TABLE
2-2.5 x PUMP FLA

MCB/ECB TABLE
200A
11 TO 40 HP

HORSEPOWER TABLE
NEMA SIZE 2 RVSS
UP TO 15 HP 42 AMP
NEMA SIZE 3 RVSS
UP TO 30 HP 88 AMP
NEMA SIZE 4 RVSS
UP TO 40 HP 52 AMP

230V, 3 PHASE, RVSS
PUMP CONTROL PANEL (POWER PANEL) WIRING DIAGRAM

SCALE: NTS

TETRA TECH
ENGINEERING BUSINESS NO. 2429
www.tetratech.com
10600 CHEVROLET WAY, SUITE 102
ESTERO, FLORIDA 33928
PHONE: (239) 390-1467 FAX: (239) 390-1769

BID SET

CITY OF SANIBEL
800 Dunlop Road
Sanibel, Florida 33957

MARK	DATE	DESCRIPTION	BY

THE CITY OF SANIBEL
LIFT STATION CONTROL PANELS
230V, THREE PH, RVSS CONTROL PANEL (POWER) WIRING DIAGRAM

Project No.:	200-08498-24002
Designed By:	JAS
Drawn By:	JAS
Checked By:	JDM

E-331
Sheet

Bar Measures 1 inch

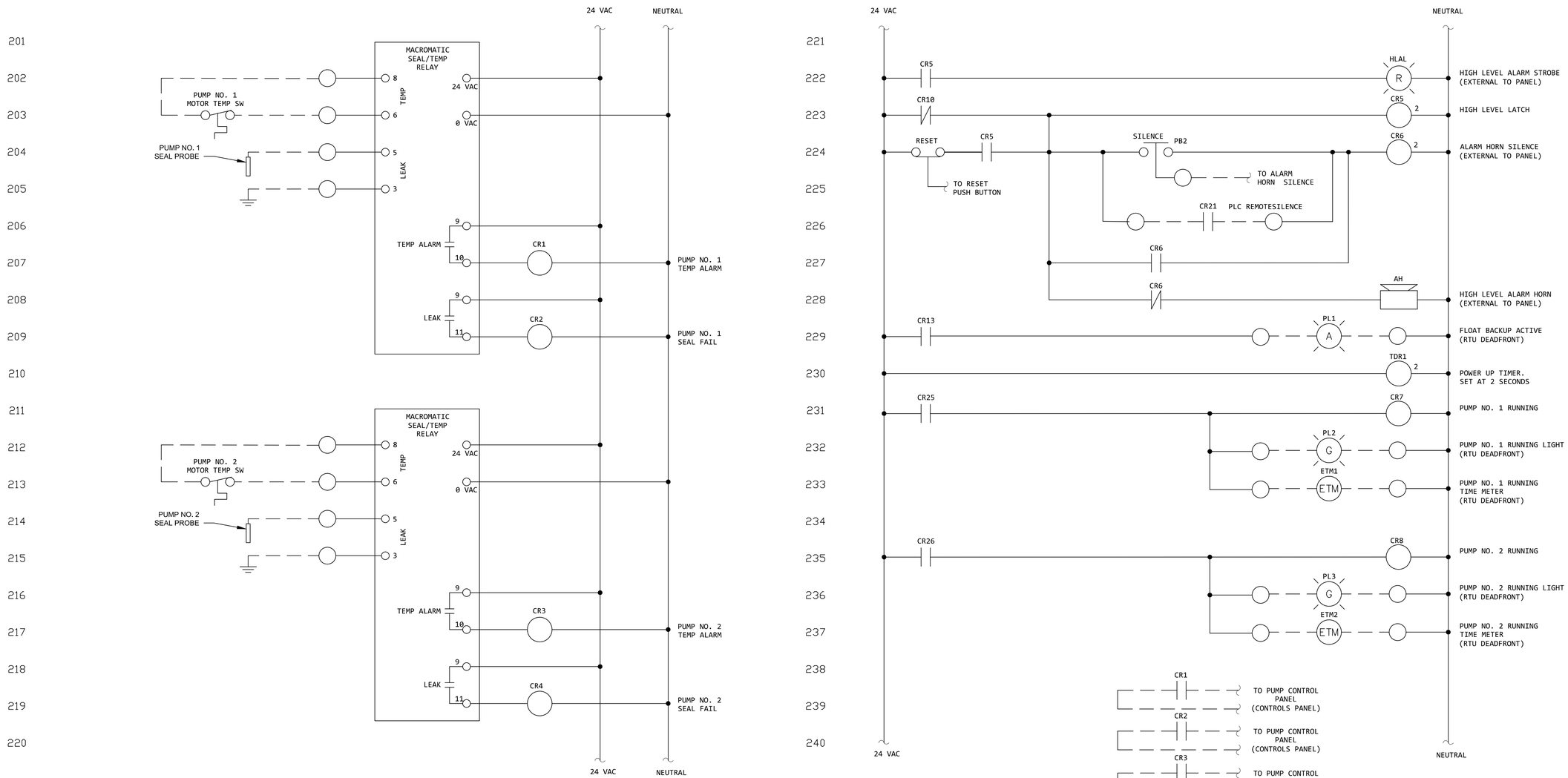

230V, 3 PHASE, RVSS
PUMP CONTROL PANEL (POWER PANEL) WIRING DIAGRAM

SCALE: NTS

TETRA TECH
ENGINEERING BUSINESS NO. 2429
www.tetratech.com
10600 CHEVROLET WAY, SUITE 102
ESTERO, FLORIDA 33928
PHONE: (239) 390-1467 FAX: (239) 390-1769

BID SET

CITY OF SANIBEL
800 Dunlop Road
Sanibel, Florida 33957

MARK	DATE	DESCRIPTION	BY

THE CITY OF SANIBEL
LIFT STATION CONTROL PANELS

230V, THREE PH, RVSS CONTROL PANEL (POWER) WIRING DIAGRAM

Project No.:	200-08498-24002
Designed By:	JAS
Drawn By:	JAS
Checked By:	JDM

E-332
Sheet

Bar Measures 1 inch

4/3/2025 3:37:56 PM - O:\PROJECTS\ORLANDO\ER\08498\200-08498-24002\CAD\SHEETFILES\E-331 - 230V, THREE PHASE, WIRING DIAGRAM, RVSS.DWG - SEIGNORET, JASON

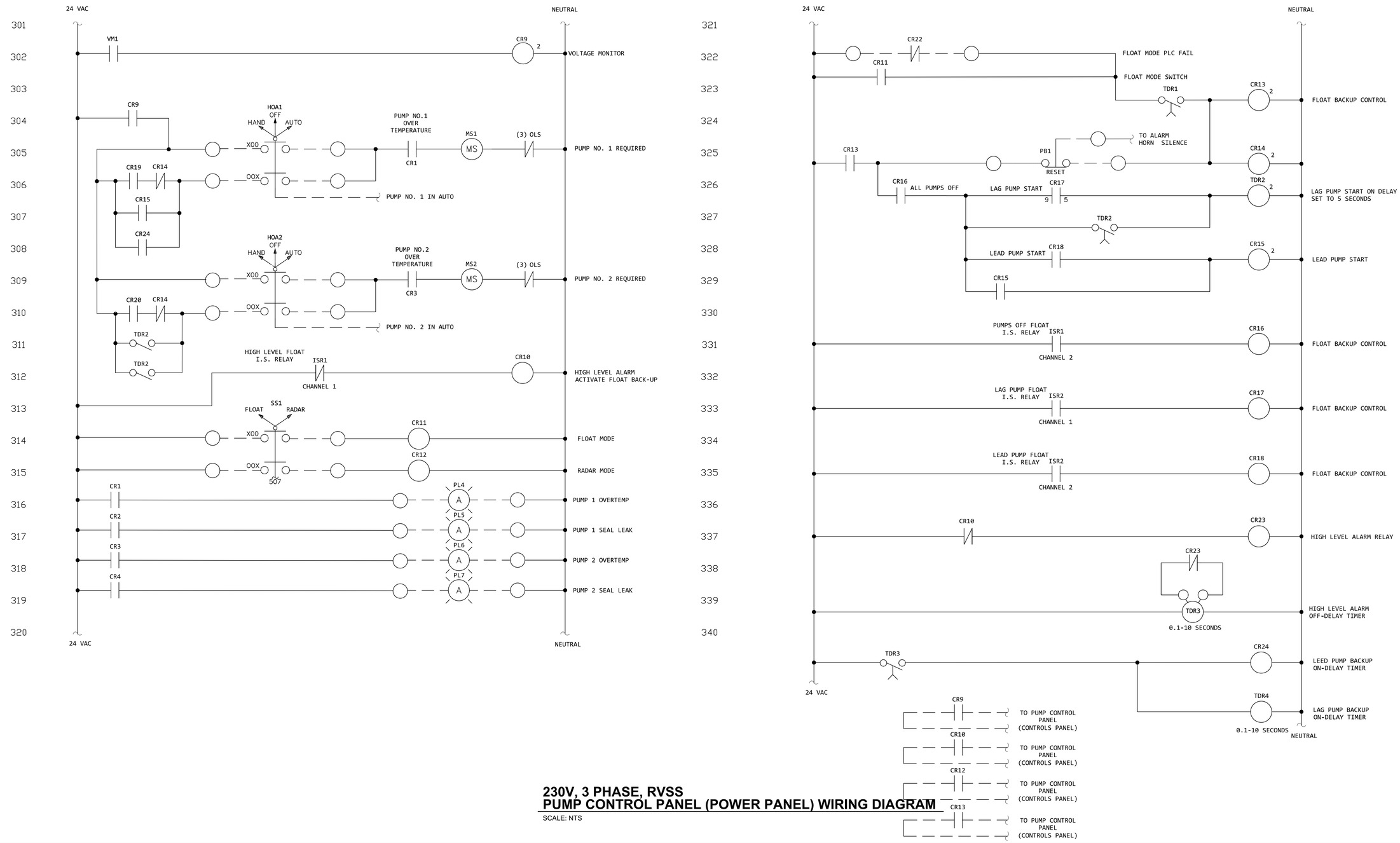

230V, 3 PHASE, RVSS
PUMP CONTROL PANEL (POWER PANEL) WIRING DIAGRAM

SCALE: NTS

TETRA TECH
ENGINEERING BUSINESS NO. 2429
www.tetratech.com
10600 CHEVROLET WAY, SUITE 102
ESTERO, FLORIDA 33928
PHONE: (239) 390-1467 FAX: (239) 390-1769

BID SET

CITY OF SANIBEL
800 Dunlop Road
Sanibel, Florida 33957

MARK	DATE	DESCRIPTION	BY

THE CITY OF SANIBEL
LIFT STATION CONTROL PANELS
230V, THREE PH, RVSS CONTROL PANEL (POWER) WIRING DIAGRAM

Project No.:	200-08498-24002
Designed By:	JAS
Drawn By:	JAS
Checked By:	JDM

E-333
Sheet

Bar Measures 1 inch

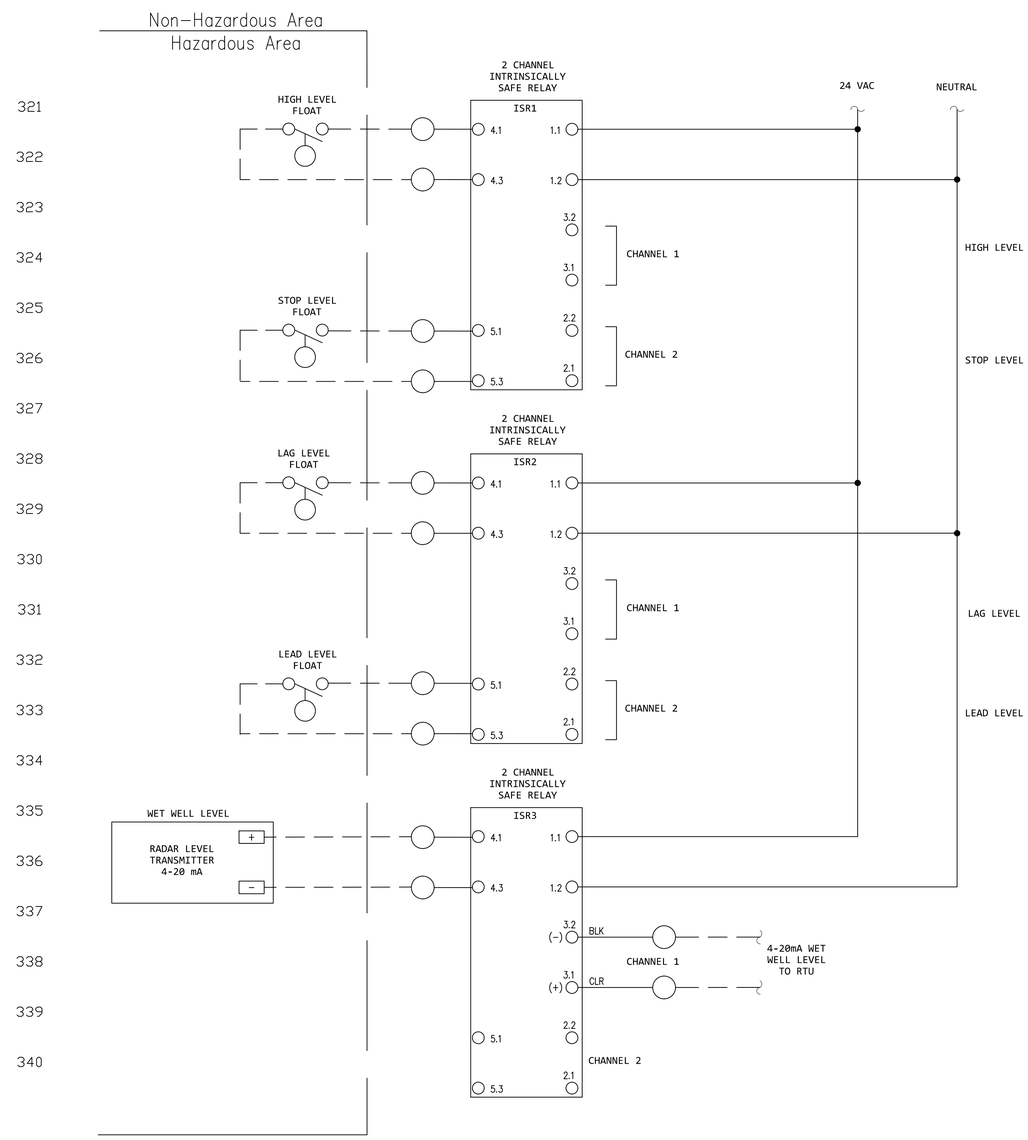

230V, 3 PHASE, RVSS
PUMP CONTROL PANEL (POWER PANEL) WIRING DIAGRAM

SCALE: NTS

TETRA TECH
ENGINEERING BUSINESS NO. 2429
www.tetratech.com
10600 CHEVROLET WAY, SUITE 102
ESTERO, FLORIDA 33928
PHONE: (239) 390-1467 FAX: (239) 390-1769

BID SET

CITY OF SANIBEL
800 Dunlop Road
Sanibel, Florida 33957

MARK	DATE	DESCRIPTION	BY

THE CITY OF SANIBEL
LIFT STATION CONTROL PANELS
230V, THREE PH, RVSS CONTROL PANEL (POWER) WIRING DIAGRAM

Project No.:	200-08498-24002
Designed By:	JAS
Drawn By:	JAS
Checked By:	JDM

E-334
Sheet

Bar Measures 1 inch

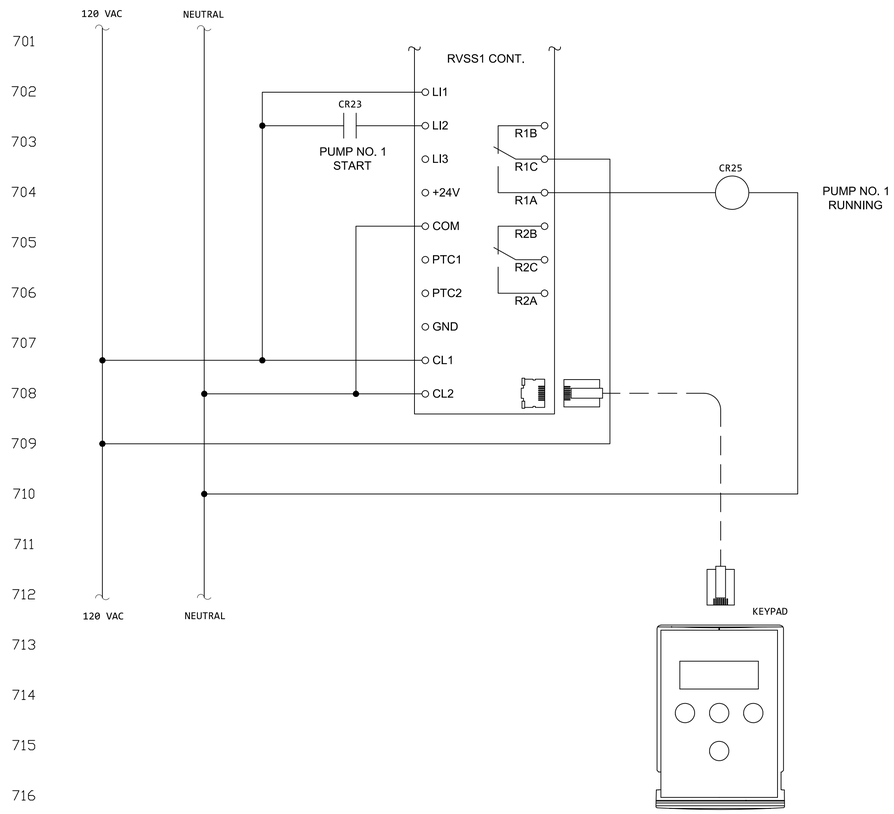

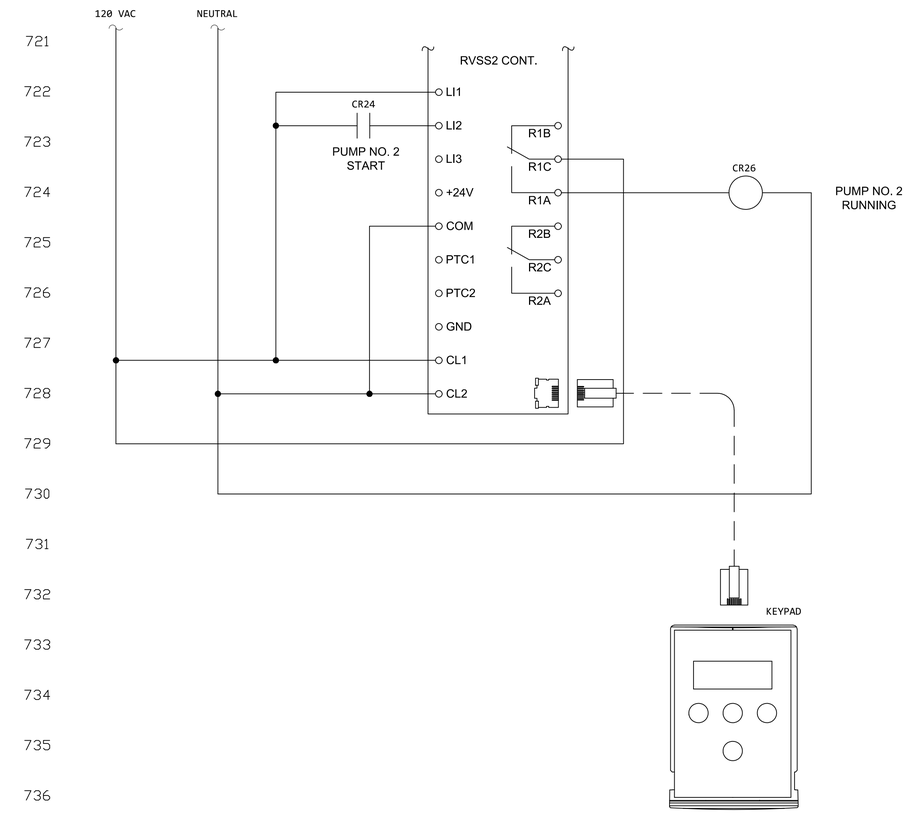

230V, 3 PHASE, RVSS
PUMP CONTROL PANEL (POWER PANEL) WIRING DIAGRAM

SCALE: NTS

TETRA TECH
ENGINEERING BUSINESS NO. 2429
www.tetratech.com
10600 CHEVROLET WAY, SUITE 102
ESTERO, FLORIDA 33928
PHONE: (239) 390-1467 FAX: (239) 390-1769

BID SET

CITY OF SANIBEL
800 Dunlop Road
Sanibel, Florida 33957

MARK	DATE	DESCRIPTION	BY

THE CITY OF SANIBEL
LIFT STATION CONTROL PANELS
230V, THREE PH, RVSS
CONTROL PANEL (POWER)
WIRING DIAGRAM

Project No.:	200-08498-24002
Designed By:	JAS
Drawn By:	JAS
Checked By:	JDM

E-335
Sheet

Bar Measures 1 inch

4/3/2025 3:38:01 PM - O:\PROJECTS\ORLANDO\IER\08498\200-08498-24002\CAD\SHEETFILES\E-331 - 230V, THREE PHASE, WIRING DIAGRAM, RVSS.DWG - SEIGNORET, JASON

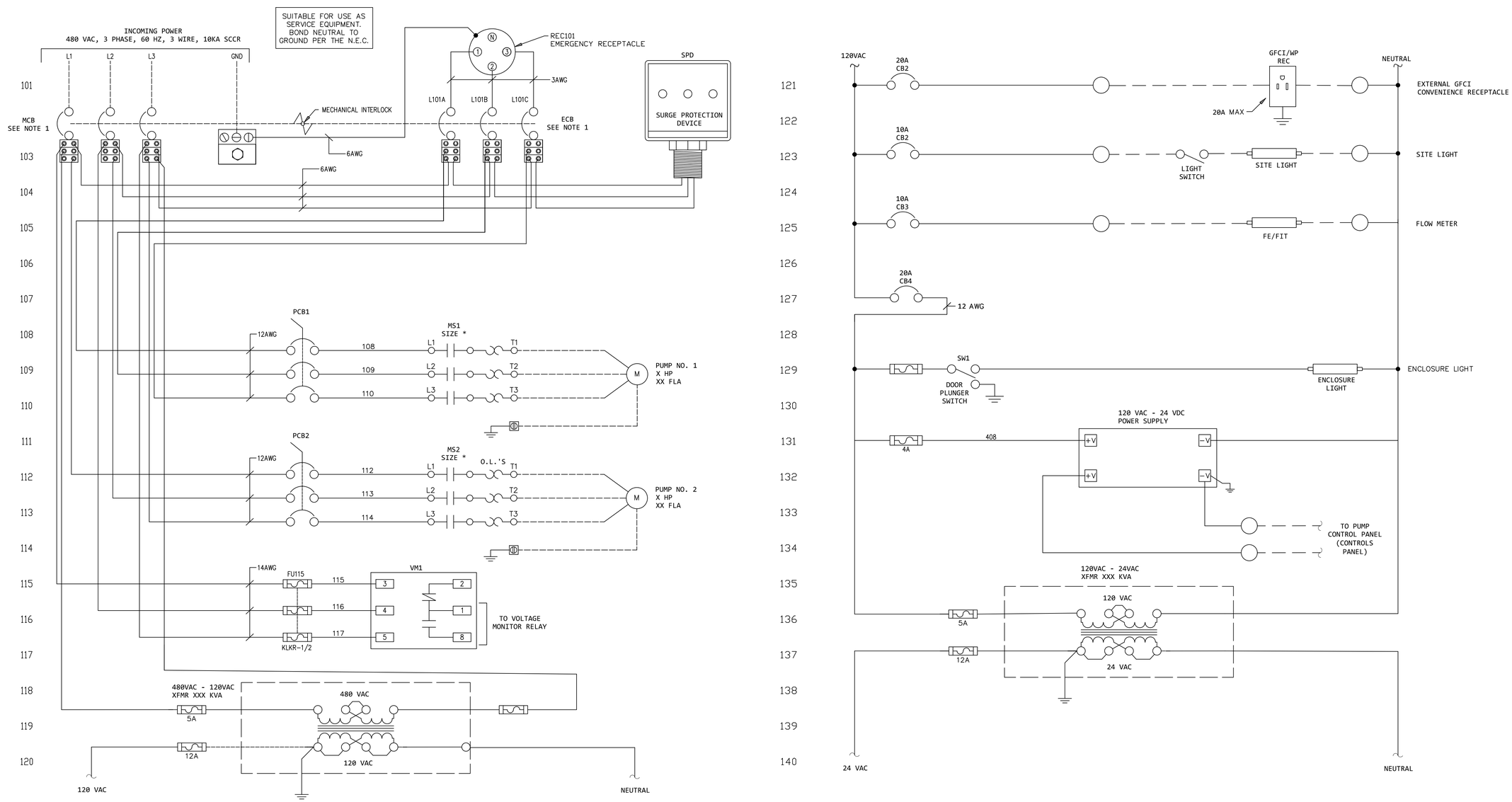

PCB1/PCB2 TABLE
2-2.5 x PUMP FLA

MCB/ECB TABLE
60A
0 TO 10 HP
100A
11 TO 25 HP
200A
26 TO 40 HP

HORSEPOWER TABLE
NEMA SIZE 0 STARTER
UP TO 5 HP 7.6 AMP
NEMA SIZE 1 STARTER
UP TO 10 HP 14 AMP

480V, 3 PHASE, STARTER
PUMP CONTROL PANEL (POWER PANEL) WIRING DIAGRAM

SCALE: NTS

TETRA TECH
ENGINEERING BUSINESS NO. 2429
www.tetratech.com
10600 CHEVROLET WAY, SUITE 102
ESTERO, FLORIDA 33928
PHONE: (239) 390-1467 FAX: (239) 390-1769

BID SET

CITY OF SANIBEL
800 Dunlop Road
Sanibel, Florida 33957

MARK	DATE	DESCRIPTION	BY

THE CITY OF SANIBEL
LIFT STATION CONTROL PANELS
480V, THREE PH, STARTER CONTROL PANEL (POWER) WIRING DIAGRAM

Project No.:	200-08498-24002
Designed By:	JAS
Drawn By:	JAS
Checked By:	JDM

E-341
Sheet

Bar Measures 1 inch

4/3/2025 3:38:03 PM - O:\PROJECTS\ORLANDO\IER\08498\200-08498-24002\CAD\SHEETFILES\E-341 -480V, THREE PHASE, WIRING DIAGRAM, STARTER.DWG - SEIGNORET, JASON

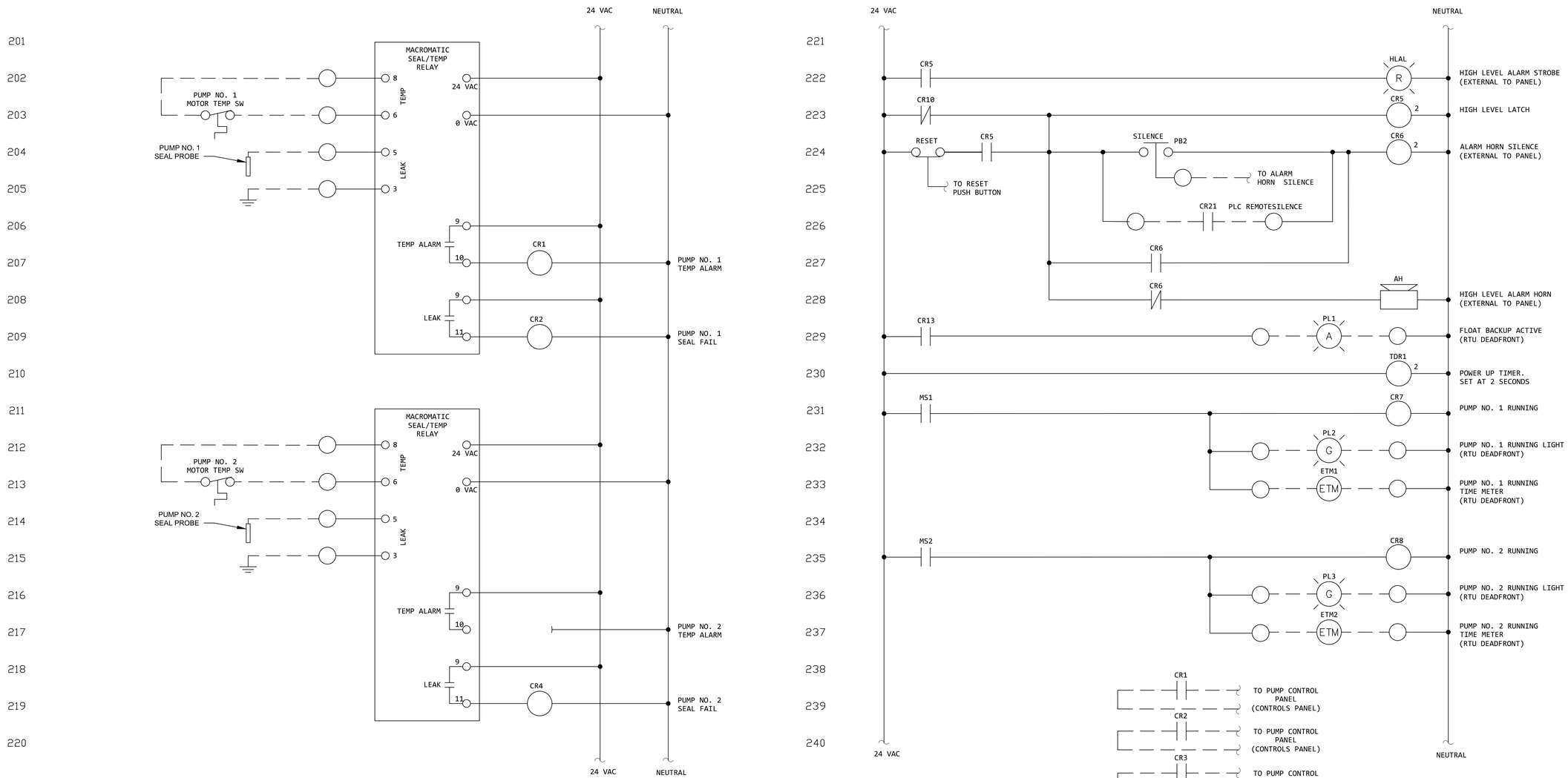

480V, 3 PHASE, STARTER
PUMP CONTROL PANEL (POWER PANEL) WIRING DIAGRAM

SCALE: NTS

TETRA TECH
ENGINEERING BUSINESS NO. 2429
www.tetratech.com
10600 CHEVROLET WAY, SUITE 102
ESTERO, FLORIDA 33928
PHONE: (239) 390-1467 FAX: (239) 390-1769

BID SET

CITY OF SANIBEL
800 Dunlop Road
Sanibel, Florida 33957

MARK	DATE	DESCRIPTION	BY

THE CITY OF SANIBEL
LIFT STATION CONTROL PANELS
480V, THREE PH, STARTER CONTROL PANEL (POWER) WIRING DIAGRAM

Project No.:	200-08498-24002
Designed By:	JAS
Drawn By:	JAS
Checked By:	JDM

E-342
Sheet

Bar Measures 1 inch

4/3/2025 3:38:05 PM - O:\PROJECTS\ORLANDO\IER\08498\200-08498-24002\CAD\SHEETFILES\E-341 480V, THREE PHASE, WIRING DIAGRAM, STARTER.DWG - SEIGNORET, JASON

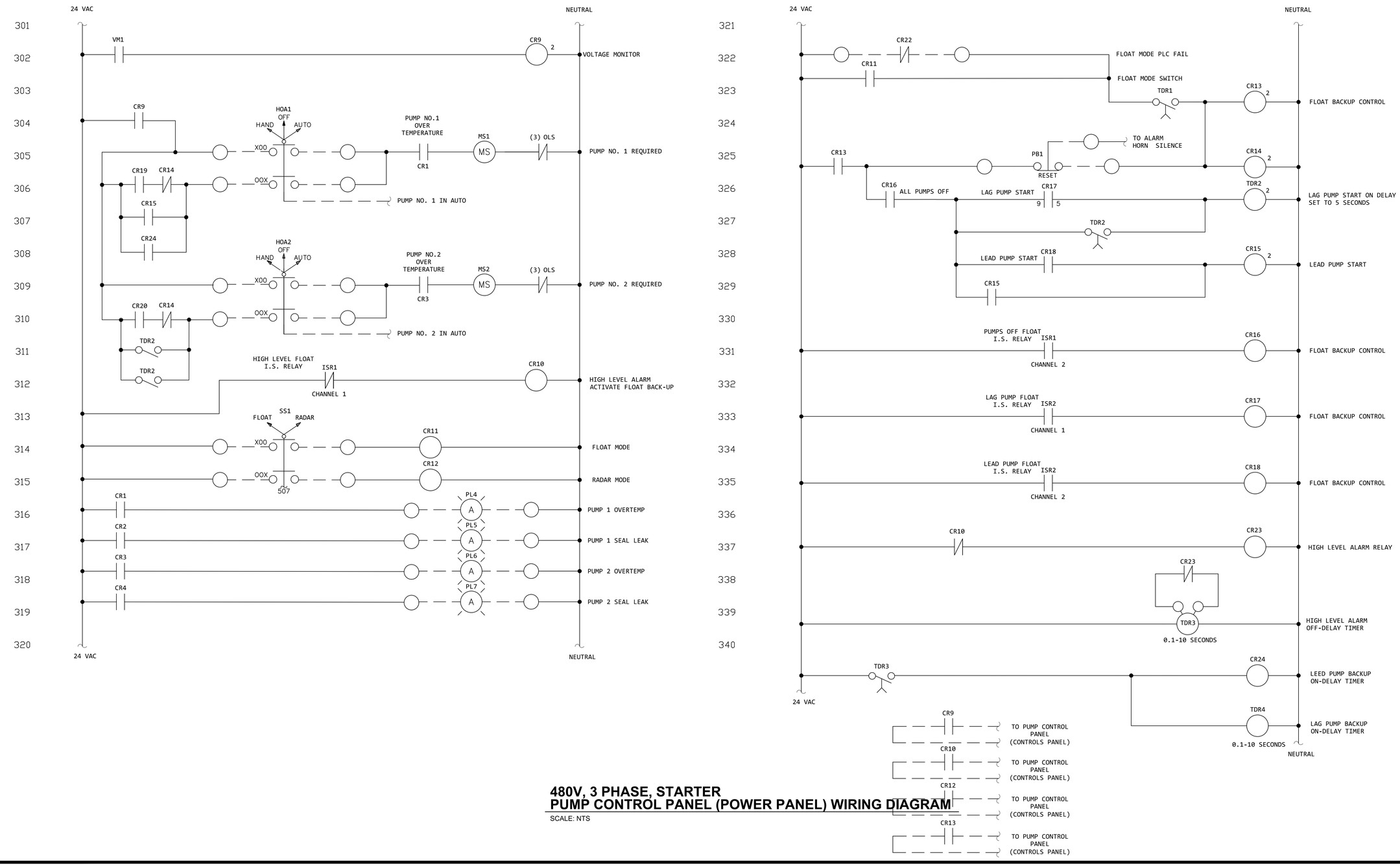

480V, 3 PHASE, STARTER PUMP CONTROL PANEL (POWER PANEL) WIRING DIAGRAM

SCALE: NTS

TETRA TECH
ENGINEERING BUSINESS NO. 2429
www.tetratech.com
10600 CHEVROLET WAY, SUITE 102
ESTERO, FLORIDA 33928
PHONE: (239) 390-1467 FAX: (239) 390-1769

BID SET

CITY OF SANIBEL
800 Dunlop Road
Sanibel, Florida 33957

MARK	DATE	DESCRIPTION	BY

THE CITY OF SANIBEL
LIFT STATION CONTROL PANELS

480V, THREE PH, STARTER CONTROL PANEL (POWER) WIRING DIAGRAM

Project No.:	200-08498-24002
Designed By:	JAS
Drawn By:	JAS
Checked By:	JDM

E-343
Sheet

Bar Measures 1 inch

4/3/2025 3:38:07 PM - O:\PROJECTS\ORLANDO\IER\08498\200-08498-24002\CAD\SHEET\FILES\E-341 -480V, THREE PHASE, WIRING DIAGRAM, STARTER.DWG - SEIGNORET, JASON

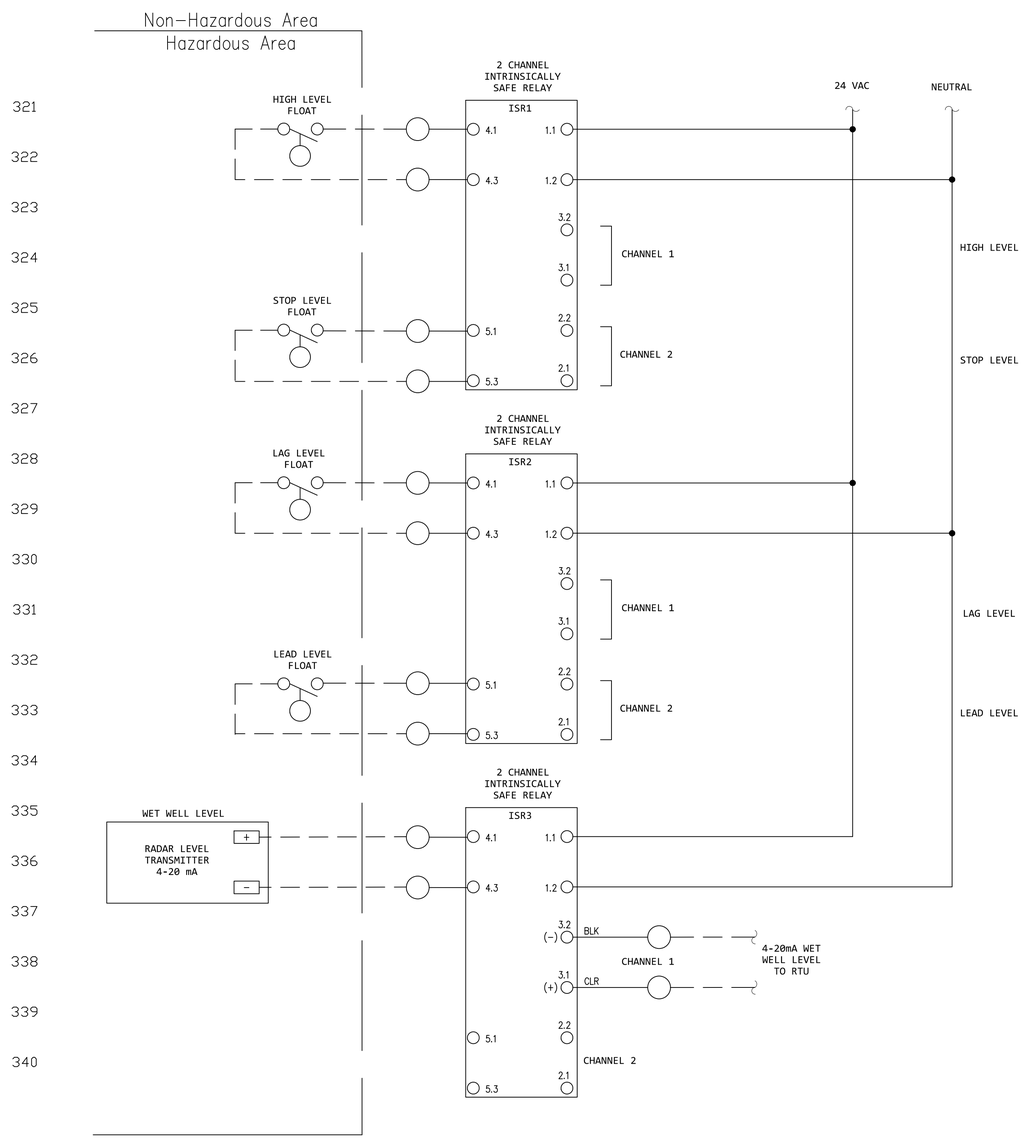

480V, 3 PHASE, STARTER PUMP CONTROL PANEL (POWER PANEL) WIRING DIAGRAM

SCALE: NTS

TETRA TECH
ENGINEERING BUSINESS NO. 2429
www.tetratech.com
10600 CHEVROLET WAY, SUITE 102
ESTERO, FLORIDA 33928
PHONE: (239) 390-1467 FAX: (239) 390-1769

BID SET

CITY OF SANIBEL
800 Dunlop Road
Sanibel, Florida 33957

MARK	DATE	DESCRIPTION	BY

THE CITY OF SANIBEL
LIFT STATION CONTROL PANELS
480V, THREE PH, STARTER CONTROL PANEL (POWER) WIRING DIAGRAM

Project No.:	200-08498-24002
Designed By:	JAS
Drawn By:	JAS
Checked By:	JDM

E-344
Sheet

Bar Measures 1 inch

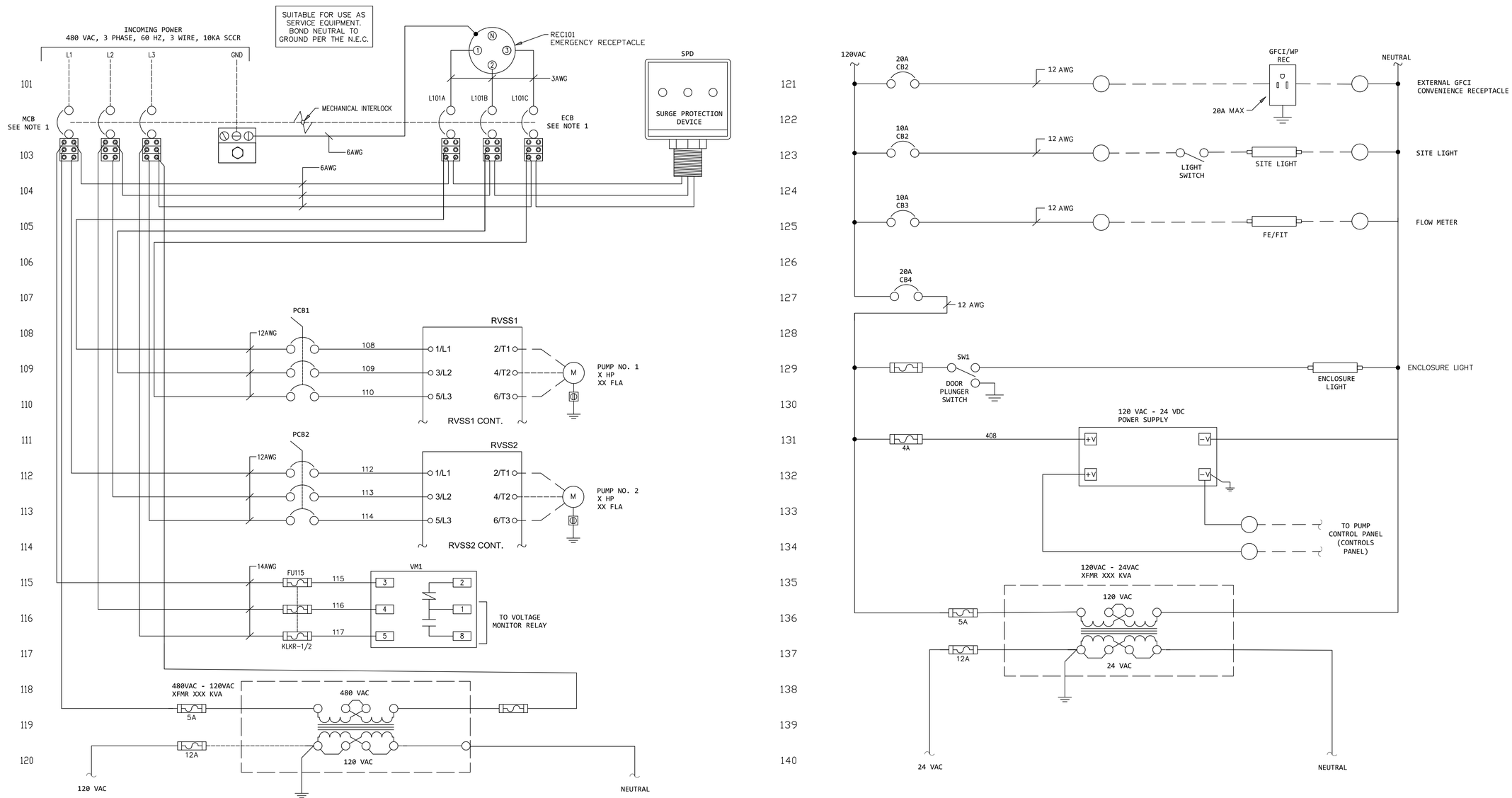

PCB1/PCB2 TABLE
2-2.5 x PUMP FLA

MCB/ECB TABLE
200A
11 TO 25 HP
200A
26 TO 40 HP

HORSEPOWER TABLE
NEMA SIZE 2 RVSS
UP TO 25 HP 34 AMP
NEMA SIZE 3 RVSS
UP TO 40 HP 52 AMP

480V, 3 PHASE, RVSS
PUMP CONTROL PANEL (POWER PANEL) WIRING DIAGRAM

SCALE: NTS

TETRA TECH
ENGINEERING BUSINESS NO. 2429
www.tetratech.com
10600 CHEVROLET WAY, SUITE 102
ESTERO, FLORIDA 33928
PHONE: (239) 390-1467 FAX: (239) 390-1769

BID SET

CITY OF SANIBEL
800 Dunlop Road
Sanibel, Florida 33957

MARK	DATE	DESCRIPTION	BY

THE CITY OF SANIBEL
LIFT STATION CONTROL PANELS
480V, THREE PH, RVSS CONTROL PANEL (POWER) WIRING DIAGRAM

Project No.:	200-08498-24002
Designed By:	JAS
Drawn By:	JAS
Checked By:	JDM

E-351
Sheet

Bar Measures 1 inch

4/3/2025 3:38:11 PM - O:\PROJECTS\ORLANDO\IER\08498\200-08498-24002\CAD\SHEETFILES\E-351 - 480V, THREE PHASE, WIRING DIAGRAM, RVSS.DWG - SEIGNORET, JASON

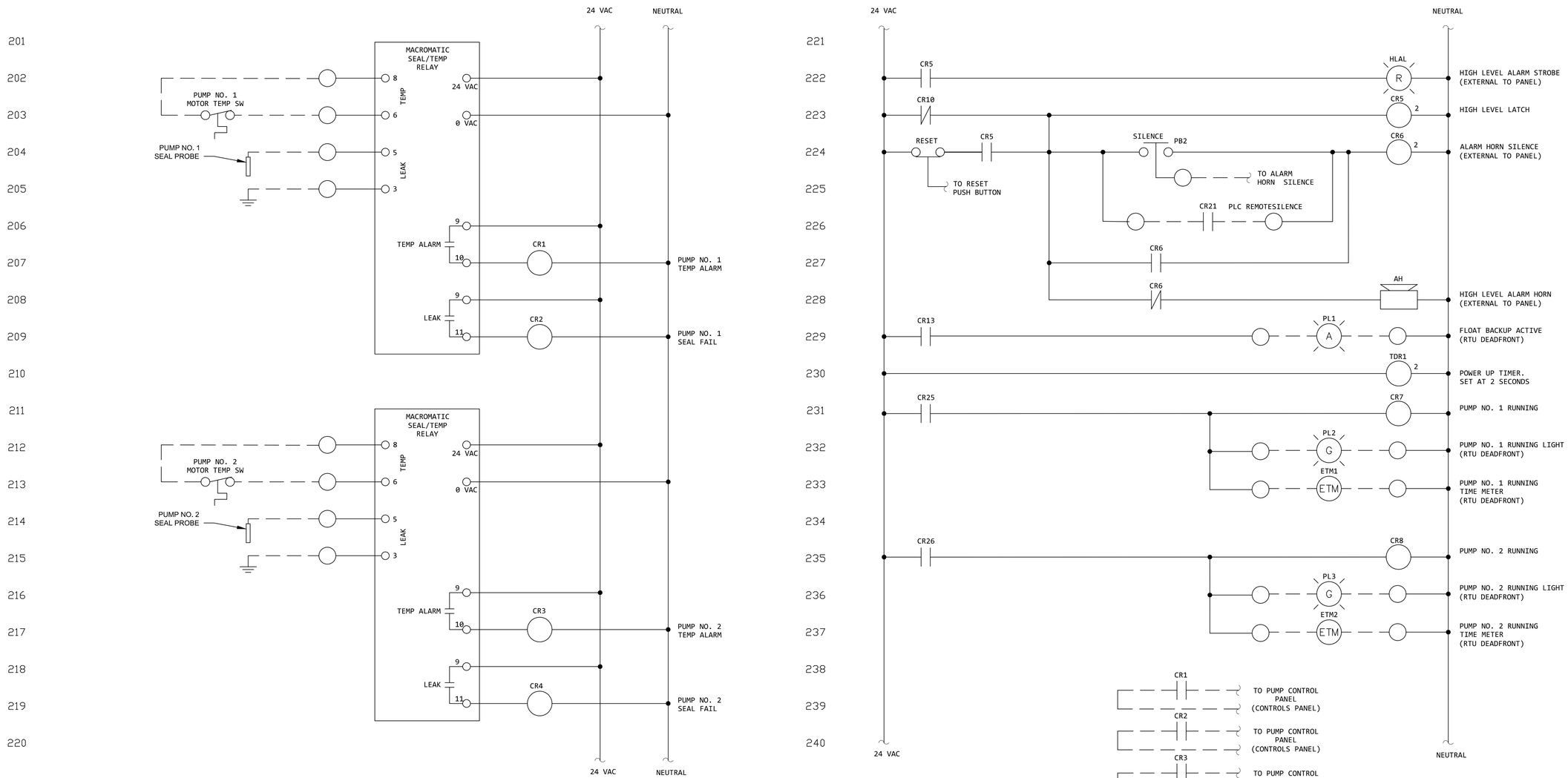

480V, 3 PHASE, RVSS
PUMP CONTROL PANEL (POWER PANEL) WIRING DIAGRAM

SCALE: NTS

TETRA TECH
ENGINEERING BUSINESS NO. 2429
www.tetratech.com
10600 CHEVROLET WAY, SUITE 102
ESTERO, FLORIDA 33928
PHONE: (239) 390-1467 FAX: (239) 390-1769

BID SET

CITY OF SANIBEL
800 Dunlop Road
Sanibel, Florida 33957

MARK	DATE	DESCRIPTION	BY

THE CITY OF SANIBEL
LIFT STATION CONTROL PANELS
480V, THREE PH, RVSS CONTROL PANEL (POWER) WIRING DIAGRAM

Project No.:	200-08498-24002
Designed By:	JAS
Drawn By:	JAS
Checked By:	JDM

E-352
Sheet

Bar Measures 1 inch

4/3/2025 3:38:13 PM - O:\PROJECTS\ORLANDO\ER\08498\200-08498-24002\CAD\SHEETFILES\E-351 - 480V, THREE PHASE, WIRING DIAGRAM, RVSS.DWG - SEIGNORET, JASON

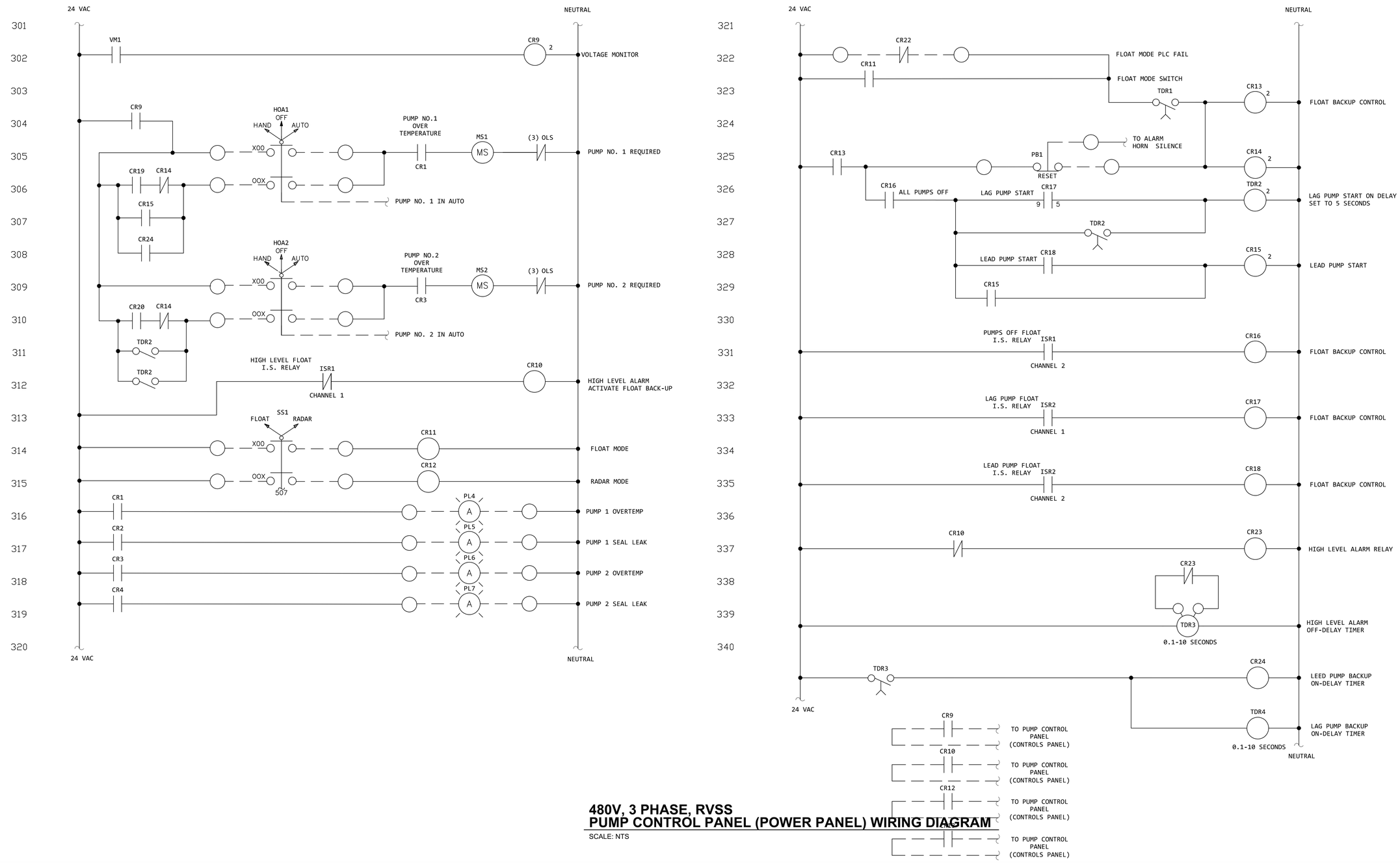

480V, 3 PHASE, RVSS
PUMP CONTROL PANEL (POWER PANEL) WIRING DIAGRAM

SCALE: NTS

TETRA TECH
ENGINEERING BUSINESS NO. 2429
www.tetratech.com
10600 CHEVROLET WAY, SUITE 102
ESTERO, FLORIDA 33928
PHONE: (239) 390-1467 FAX: (239) 390-1769

BID SET

CITY OF SANIBEL
800 Dunlop Road
Sanibel, Florida 33957

MARK	DATE	DESCRIPTION	BY

THE CITY OF SANIBEL
LIFT STATION CONTROL PANELS

480V, THREE PH, RVSS
CONTROL PANEL (POWER)
WIRING DIAGRAM

Project No.:	200-08498-24002
Designed By:	JAS
Drawn By:	JAS
Checked By:	JDM

E-353
Sheet

Bar Measures 1 inch

4/3/2025 3:38:16 PM - O:\PROJECTS\ORLANDO\IER\08498\200-08498-24002\CAD\SHEET\FILES\E-351 - 480V, THREE PHASE, WIRING DIAGRAM, RVSS.DWG - SEIGNORET, JASON

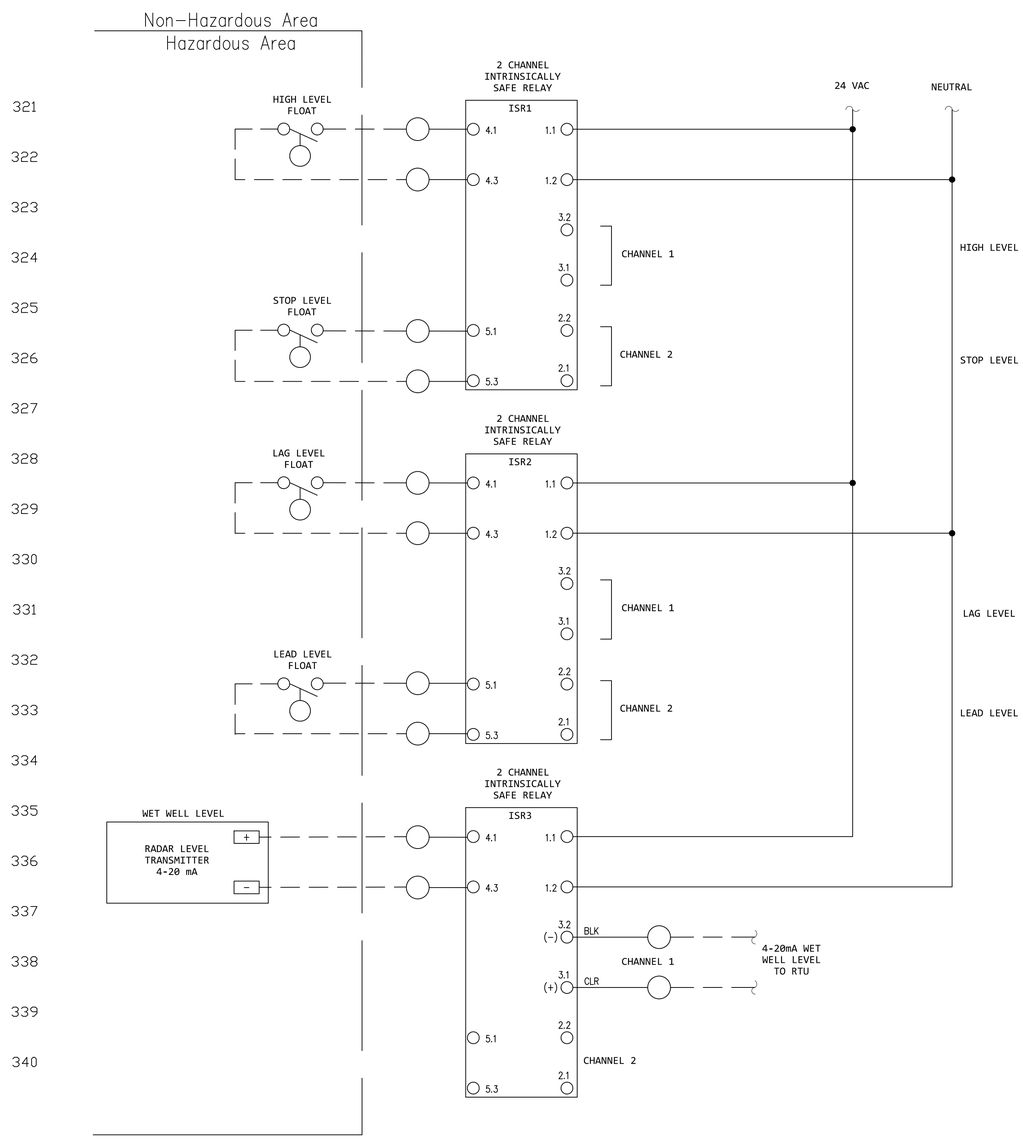

480V, 3 PHASE, RVSS
PUMP CONTROL PANEL (POWER PANEL) WIRING DIAGRAM

SCALE: NTS

TETRA TECH
ENGINEERING BUSINESS NO. 2429
www.tetratech.com
10600 CHEVROLET WAY, SUITE 102
ESTERO, FLORIDA 33928
PHONE: (239) 390-1467 FAX: (239) 390-1769

BID SET

CITY OF SANIBEL
800 Dunlop Road
Sanibel, Florida 33957

MARK	DATE	DESCRIPTION	BY

THE CITY OF SANIBEL
LIFT STATION CONTROL PANELS
480V, THREE PH, RVSS CONTROL PANEL (POWER) WIRING DIAGRAM

Project No.:	200-08498-24002
Designed By:	JAS
Drawn By:	JAS
Checked By:	JDM

E-354
Sheet

Bar Measures 1 inch

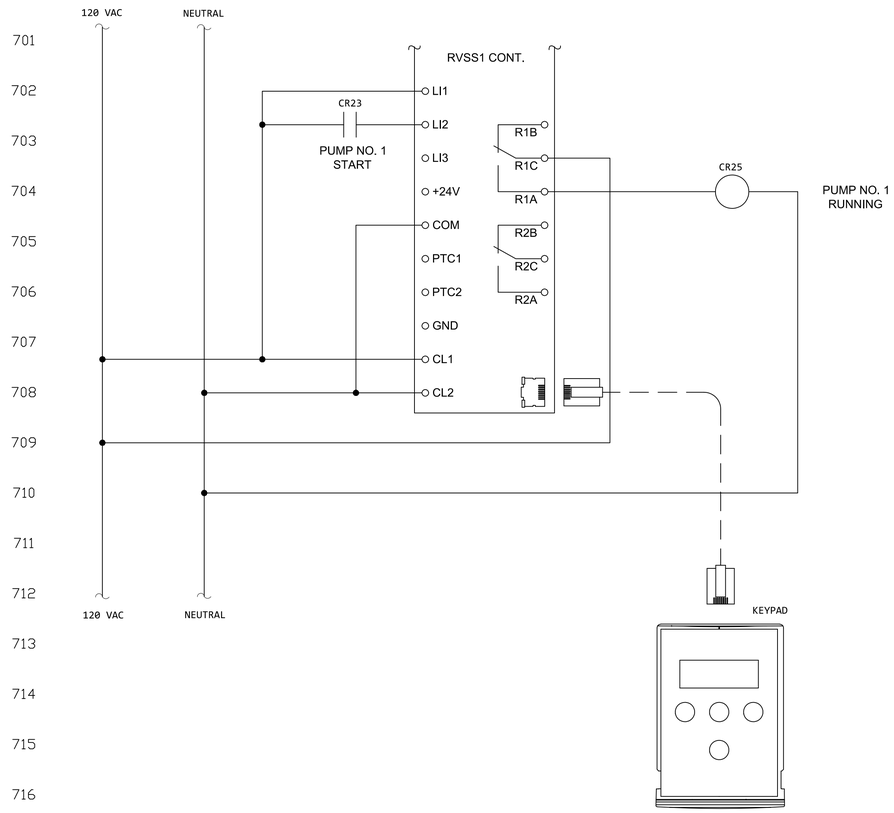

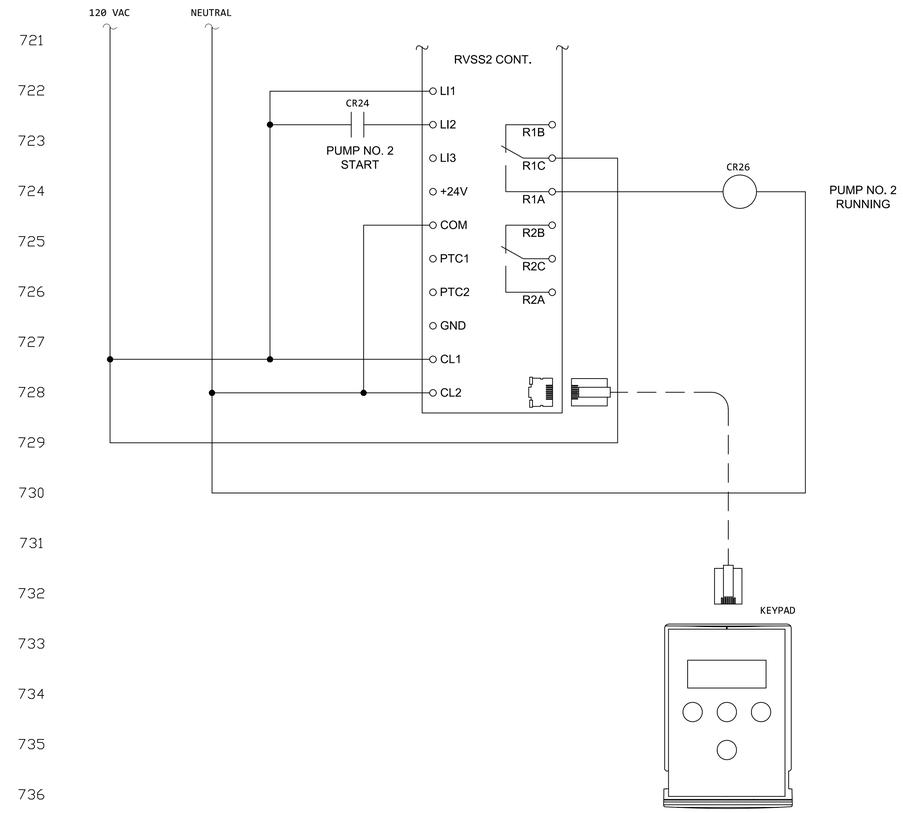

480V, 3 PHASE, RVSS
PUMP CONTROL PANEL (POWER PANEL) WIRING DIAGRAM

SCALE: NTS

TETRA TECH
ENGINEERING BUSINESS NO. 2429
www.tetratech.com
10600 CHEVROLET WAY, SUITE 102
ESTERO, FLORIDA 33928
PHONE: (239) 390-1467 FAX: (239) 390-1769

BID SET

CITY OF SANIBEL
800 Dunlop Road
Sanibel, Florida 33957

MARK	DATE	DESCRIPTION	BY

THE CITY OF SANIBEL
LIFT STATION CONTROL PANELS
480V, THREE PH, RVSS
CONTROL PANEL (POWER)
WIRING DIAGRAM

Project No.:	200-08498-24002
Designed By:	JAS
Drawn By:	JAS
Checked By:	JDM

E-355
Sheet

Bar Measures 1 inch

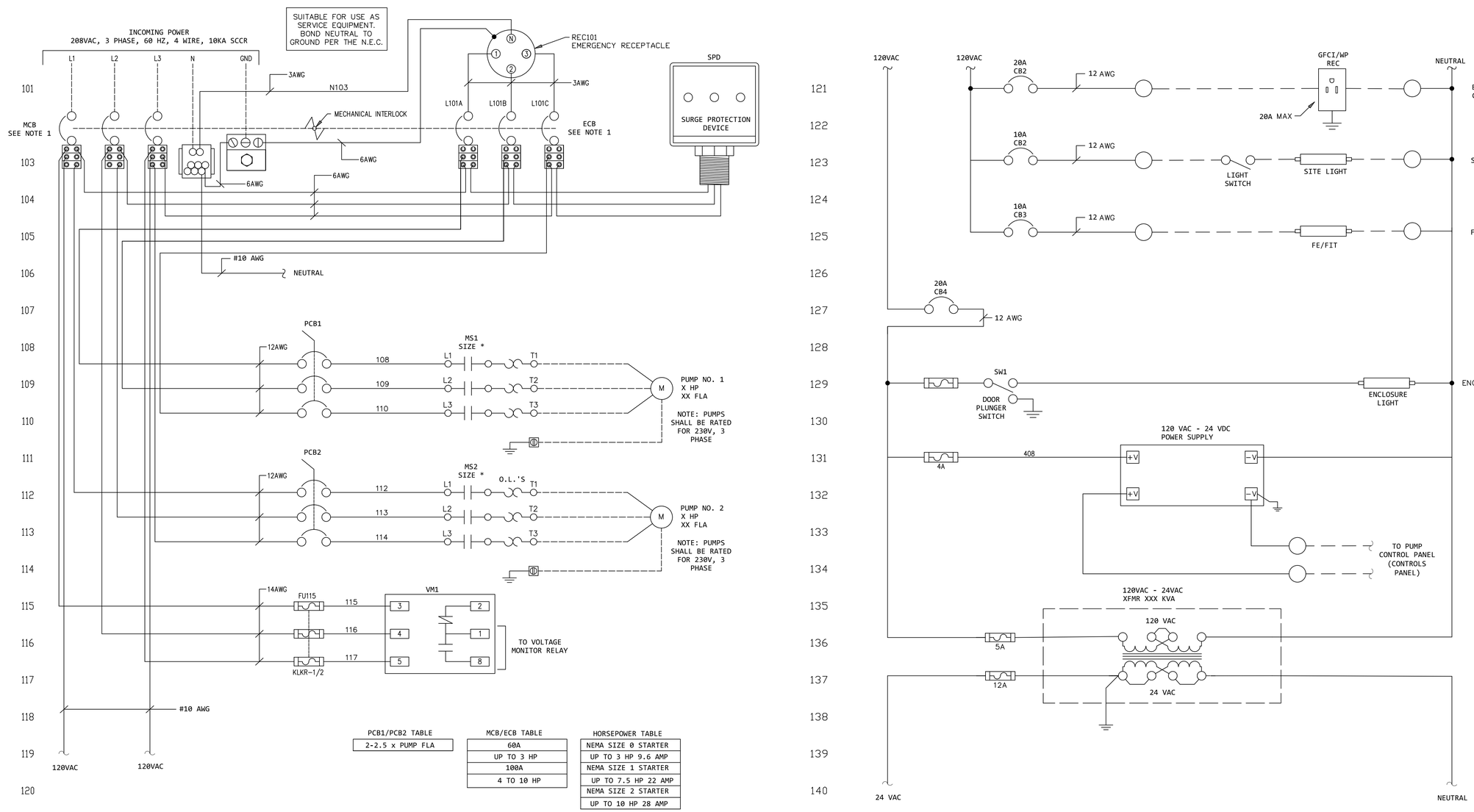

208V, 3 PHASE, STARTER PUMP CONTROL PANEL (POWER PANEL) WIRING DIAGRAM

SCALE: NTS

TETRA TECH
ENGINEERING BUSINESS NO. 2429
www.tetratech.com
10600 CHEVROLET WAY, SUITE 102
ESTERO, FLORIDA 33928
PHONE: (239) 390-1467 FAX: (239) 390-1769

BID SET

CITY OF SANIBEL
800 Dunlop Road
Sanibel, Florida 33957

MARK	DATE	DESCRIPTION	BY

THE CITY OF SANIBEL
LIFT STATION CONTROL PANELS
208V, THREE PH, STARTER CONTROL PANEL (POWER) WIRING DIAGRAM

Project No.:	200-08498-24002
Designed By:	JAS
Drawn By:	JAS
Checked By:	JDM

E-361
Sheet

Bar Measures 1 inch

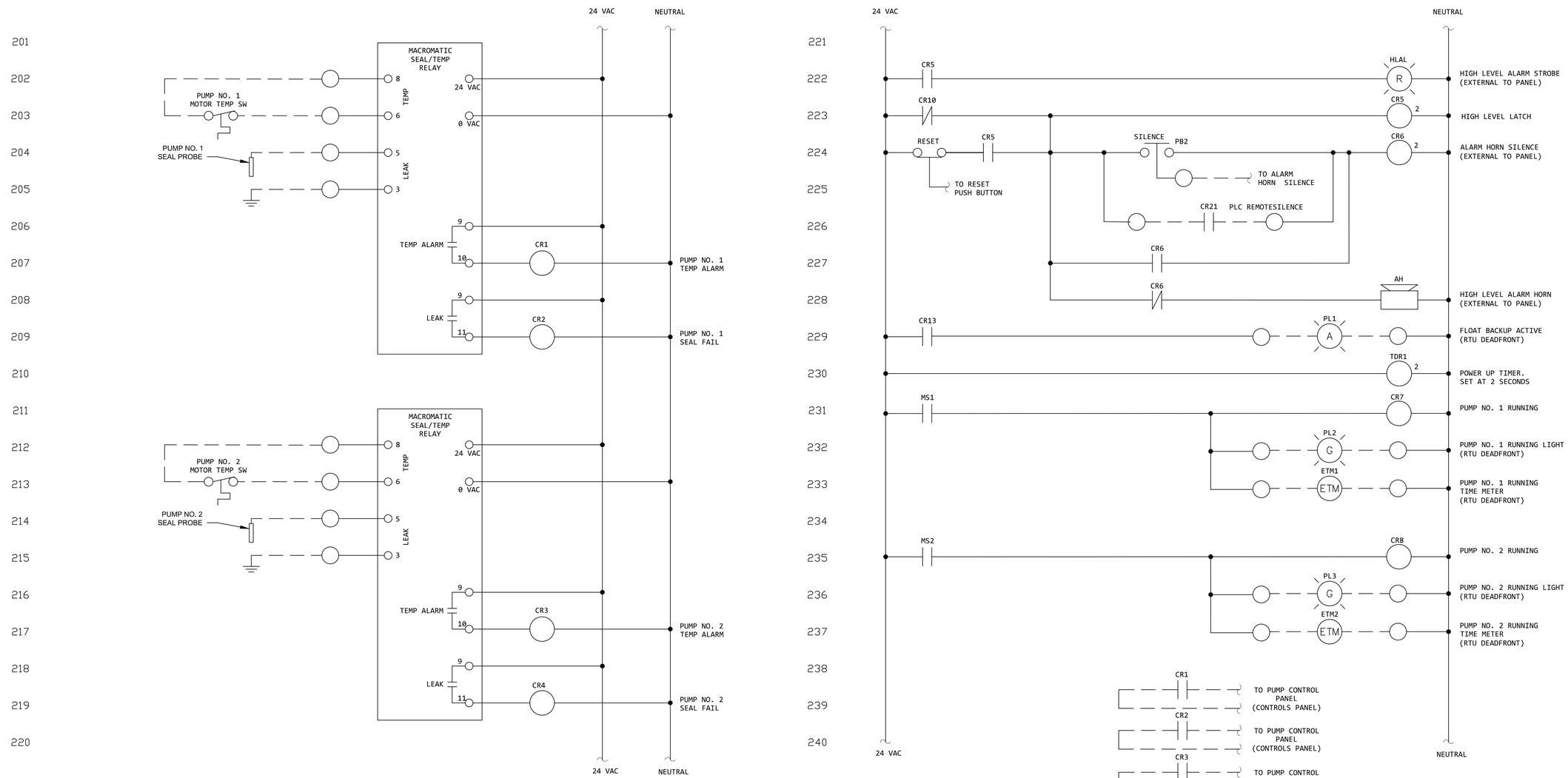

208V, 3 PHASE, STARTER PUMP CONTROL PANEL (POWER PANEL) WIRING DIAGRAM

SCALE: NTS

TETRA TECH
ENGINEERING BUSINESS NO. 2429
www.tetratech.com
10600 CHEVROLET WAY, SUITE 102
ESTERO, FLORIDA 33928
PHONE: (239) 390-1467 FAX: (239) 390-1769

BID SET

CITY OF SANIBEL
800 Dunlop Road
Sanibel, Florida 33957

MARK	DATE	DESCRIPTION	BY

THE CITY OF SANIBEL
LIFT STATION CONTROL PANELS
208V, THREE PH, STARTER CONTROL PANEL (POWER) WIRING DIAGRAM

Project No.:	200-08498-24002
Designed By:	JAS
Drawn By:	JAS
Checked By:	JDM

E-362
Sheet

Bar Measures 1 inch

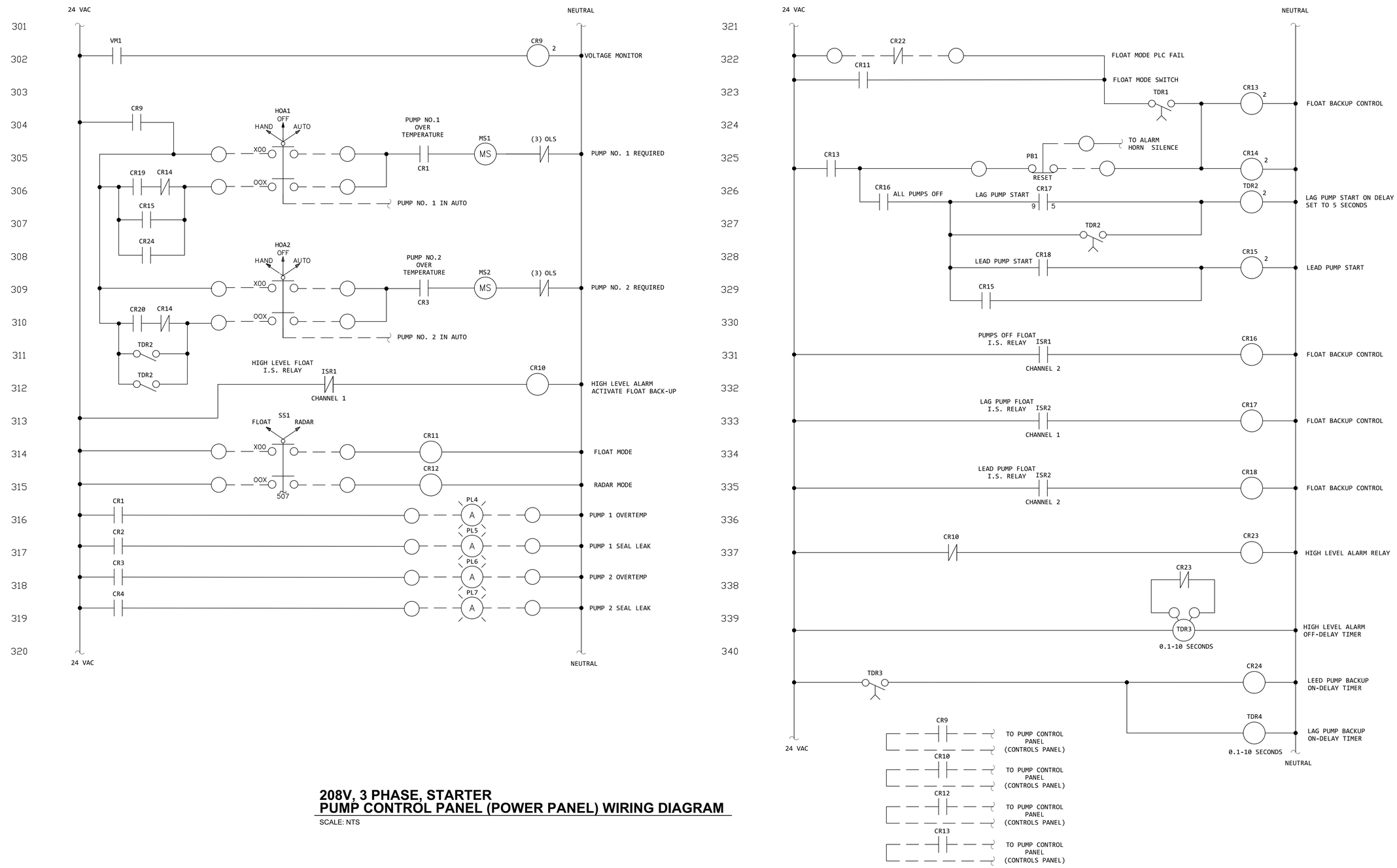

208V, 3 PHASE, STARTER PUMP CONTROL PANEL (POWER PANEL) WIRING DIAGRAM

SCALE: NTS

TETRA TECH
ENGINEERING BUSINESS NO. 2429
www.tetratech.com
10600 CHEVROLET WAY, SUITE 102
ESTERO, FLORIDA 33928
PHONE: (239) 390-1467 FAX: (239) 390-1769

BID SET

CITY OF SANIBEL
800 Dunlop Road
Sanibel, Florida 33957

MARK	DATE	DESCRIPTION	BY

THE CITY OF SANIBEL
LIFT STATION CONTROL PANELS

208V, THREE PH, STARTER CONTROL PANEL (POWER) WIRING DIAGRAM

Project No.:	200-08498-24002
Designed By:	JAS
Drawn By:	JAS
Checked By:	JDM

E-363
Sheet

Bar Measures 1 inch

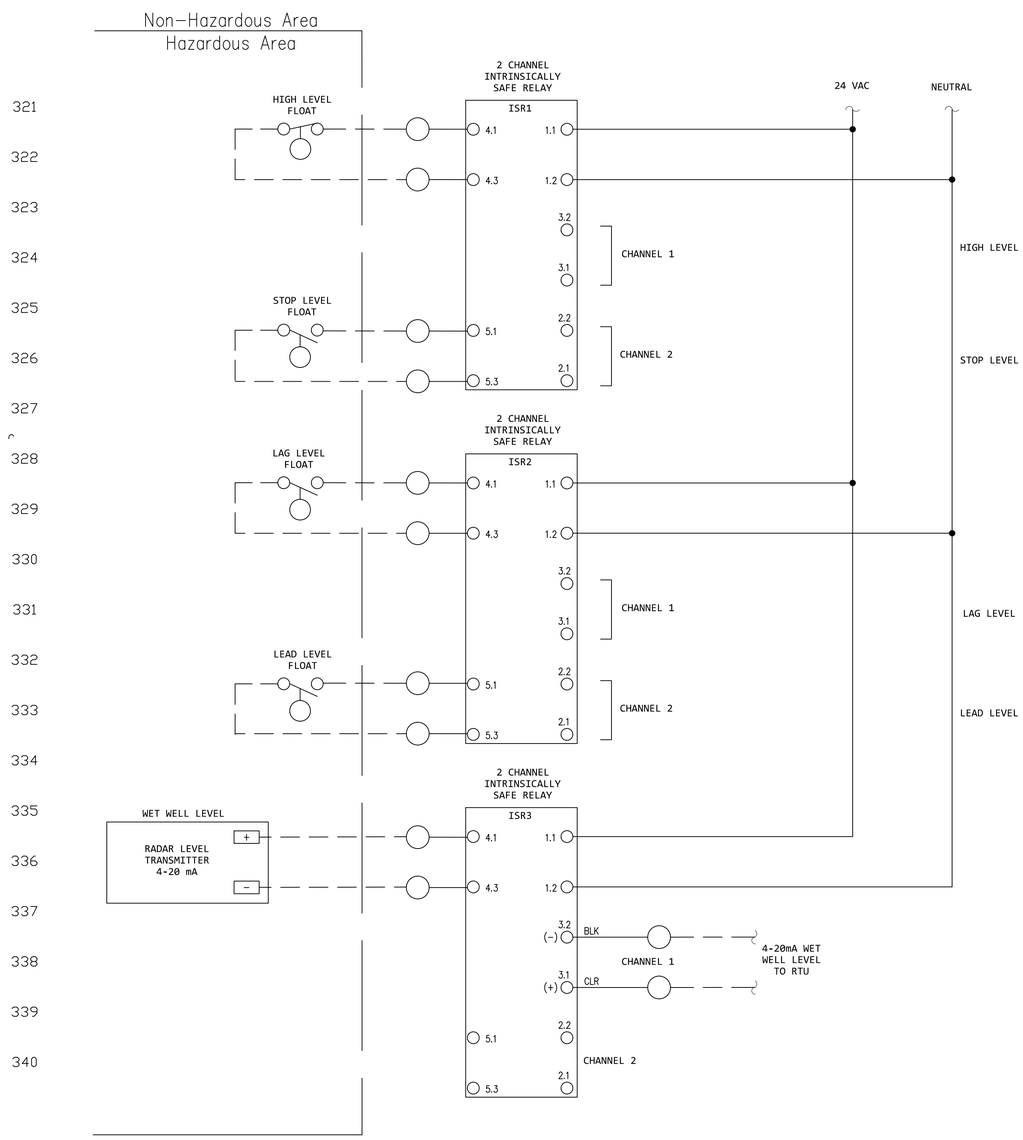

208V, 3 PHASE, STARTER PUMP CONTROL PANEL (POWER PANEL) WIRING DIAGRAM

SCALE: NTS

TETRA TECH
ENGINEERING BUSINESS NO. 2429
www.tetratech.com
10600 CHEVROLET WAY, SUITE 102
ESTERO, FLORIDA 33928
PHONE: (239) 390-1467 FAX: (239) 390-1769

BID SET

CITY OF SANIBEL
800 Dunlop Road
Sanibel, Florida 33957

MARK	DATE	DESCRIPTION	BY

THE CITY OF SANIBEL
LIFT STATION CONTROL PANELS
208V, THREE PH, STARTER CONTROL PANEL (POWER) WIRING DIAGRAM

Project No.:	200-08498-24002
Designed By:	JAS
Drawn By:	JAS
Checked By:	JDM

E-364
Sheet

Bar Measures 1 inch

4/3/2025 3:38:31 PM - O:\PROJECTS\ORLANDO\IER\08498\200-08498-24002\CAD\SHEETFILES\E-361 - 208V, THREE PHASE, WIRING DIAGRAM, STARTER.DWG - SEIGNORET, JASON

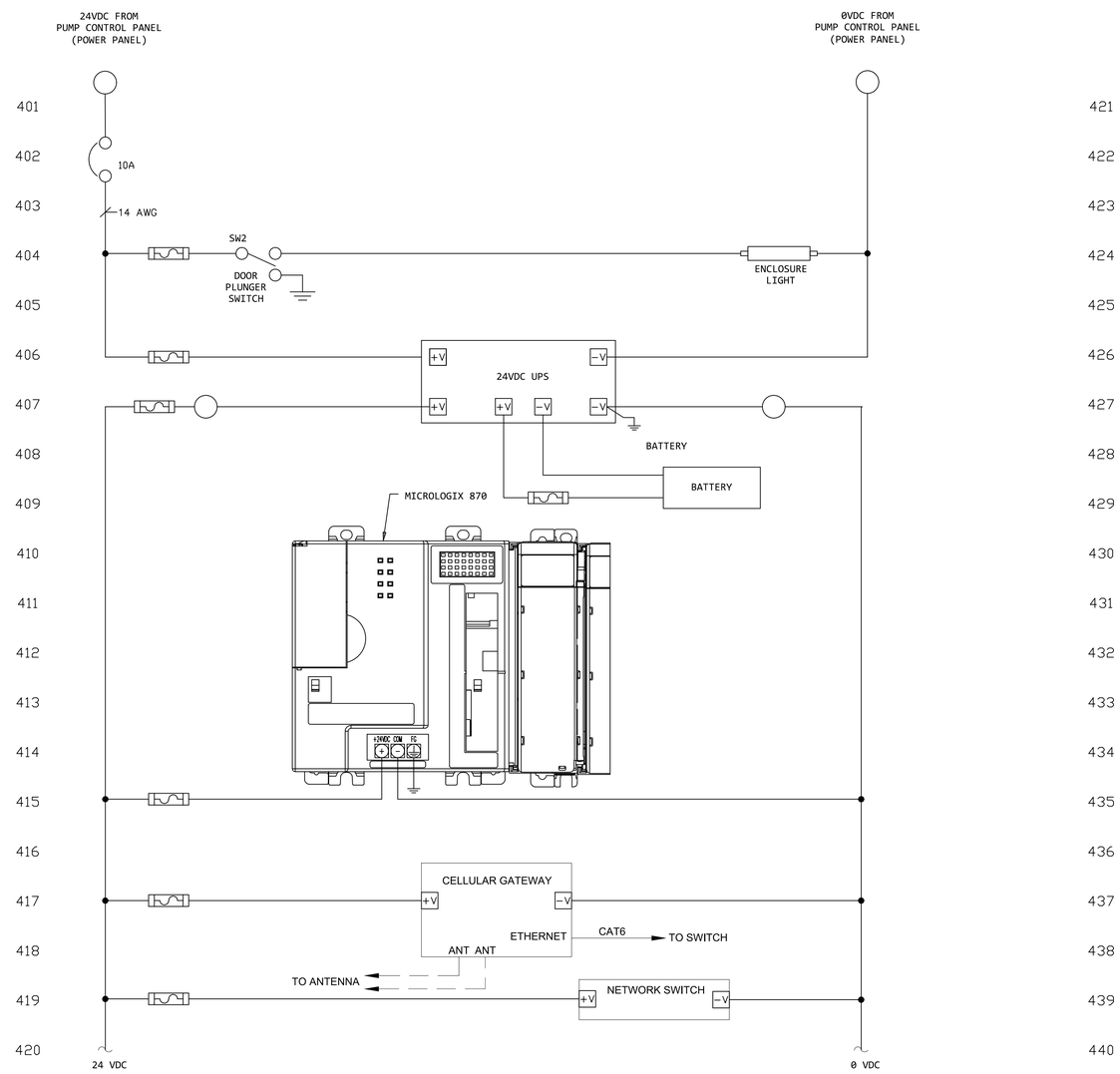

PUMP CONTROL PANEL (CONTROLS PANEL) - WIRING DIAGRAM

SCALE: NTS

TETRA TECH
ENGINEERING BUSINESS NO. 2429
www.tetratech.com
10600 CHEVROLET WAY, SUITE 102
ESTERO, FLORIDA 33928
PHONE: (239) 390-1467 FAX: (239) 390-1769

BID SET

CITY OF SANIBEL
800 Dunlop Road
Sanibel, Florida 33957

MARK	DATE	DESCRIPTION	BY

THE CITY OF SANIBEL
POST HURRICANE IAN LIFT STATION CONTROL PANEL PROCUREMENT PHASE 1
PUMP CONTROL PANEL (CONTROLS PANEL) WIRING DIAGRAM

Project No.:	200-08498-24002
Designed By:	JAS
Drawn By:	JAS
Checked By:	JDM

E-371
Sheet

Bar Measures 1 inch

4/3/2025 3:38:38 PM - O:\PROJECTS\ORLANDO\IER\08498\200-08498-24002\CAD\SHEETFILES\E-371 - RTU WIRING DIAGRAM.DWG - SEIGNORET, JASON

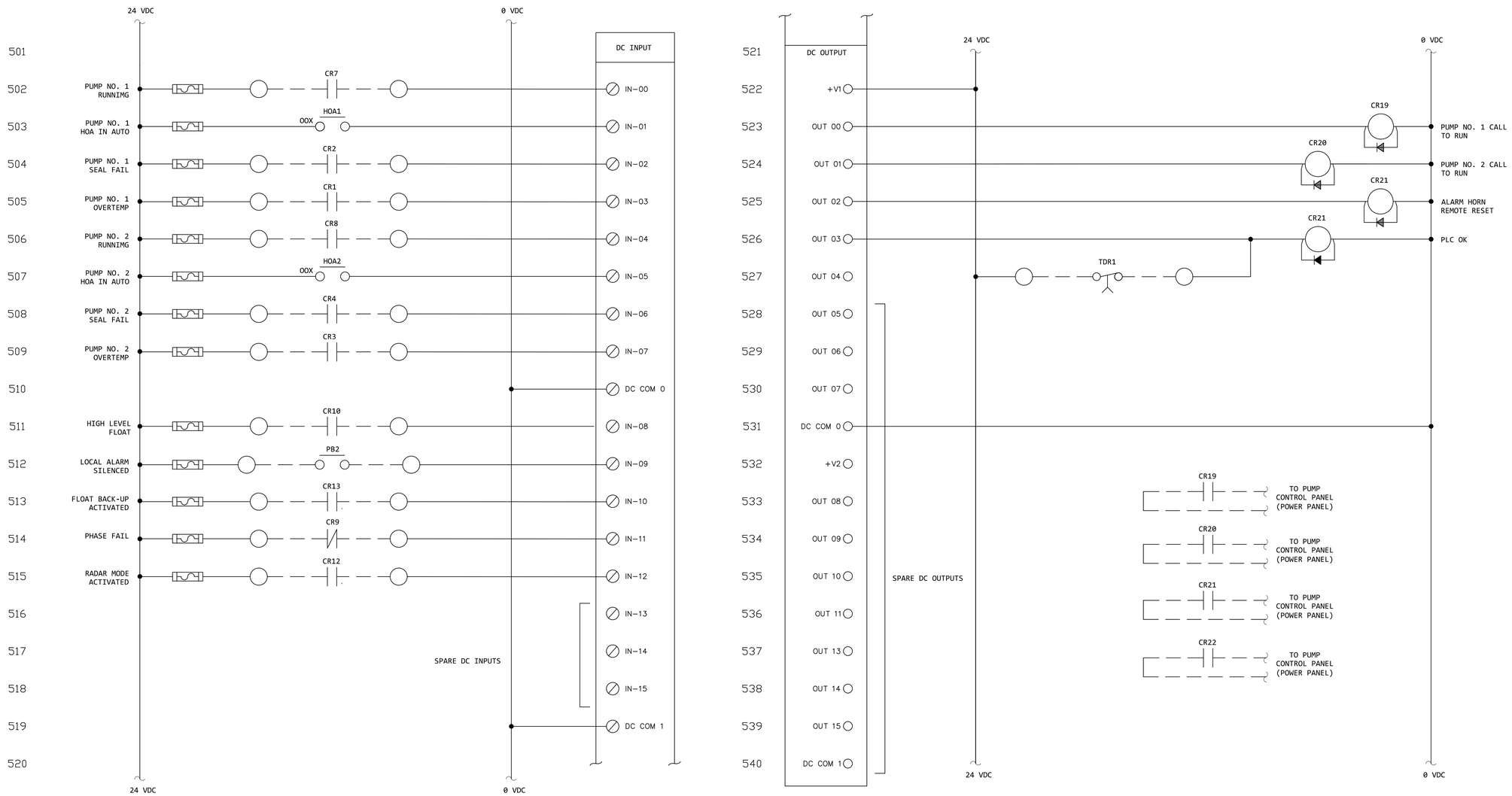

PUMP CONTROL PANEL (CONTROLS PANEL) - WIRING DIAGRAM

SCALE: NTS

TETRA TECH
ENGINEERING BUSINESS NO. 2429
www.tetratech.com
10600 CHEVROLET WAY, SUITE 102
ESTERO, FLORIDA 33928
PHONE: (239) 390-1467 FAX: (239) 390-1769

BID SET

CITY OF SANIBEL
800 Dunlop Road
Sanibel, Florida 33957

MARK	DATE	DESCRIPTION	BY

THE CITY OF SANIBEL
POST HURRICANE IAN LIFT STATION CONTROL PANEL PROCUREMENT PHASE 1
PUMP CONTROL PANEL (CONTROLS PANEL) WIRING DIAGRAM

Project No.:	200-08498-24002
Designed By:	JAS
Drawn By:	JAS
Checked By:	JDM

E-372
Sheet

Bar Measures 1 inch

4/3/2025 3:38:40 PM - O:\PROJECTS\ORLANDO\IER\08498\200-08498-24002\CAD\SHEETFILES\E-371 - RTU WIRING DIAGRAM.DWG - SEIGNORET, JASON

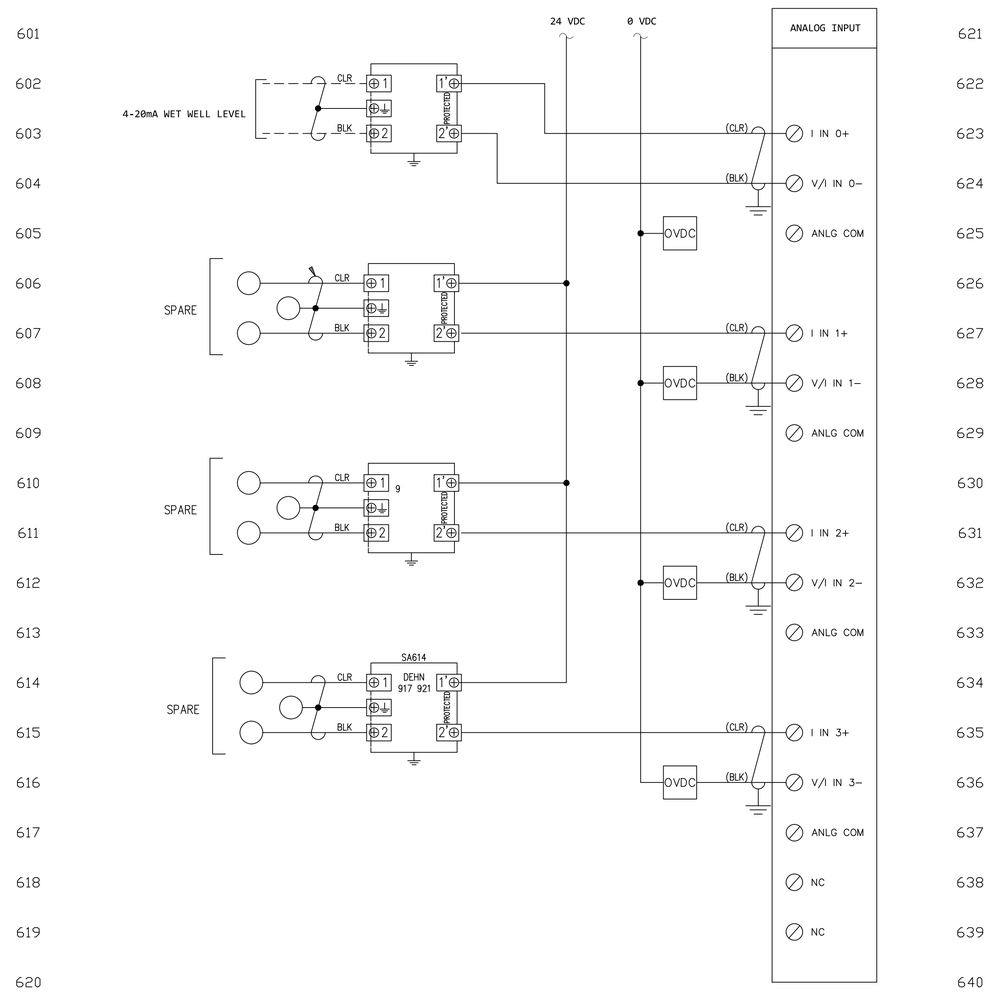

PUMP CONTROL PANEL (CONTROLS PANEL) - WIRING DIAGRAM

SCALE: NTS

TETRA TECH
ENGINEERING BUSINESS NO. 2429
www.tetratech.com
10600 CHEVROLET WAY, SUITE 102
ESTERO, FLORIDA 33928
PHONE: (239) 390-1467 FAX: (239) 390-1769

BID SET

CITY OF SANIBEL
800 Dunlop Road
Sanibel, Florida 33957

MARK	DATE	DESCRIPTION	BY

THE CITY OF SANIBEL
POST HURRICANE IAN LIFT STATION CONTROL PANEL PROCUREMENT PHASE 1
PUMP CONTROL PANEL (CONTROLS PANEL) WIRING DIAGRAM

Project No.:	200-08498-24002
Designed By:	JAS
Drawn By:	JAS
Checked By:	JDM

E-373
Sheet

Bar Measures 1 inch